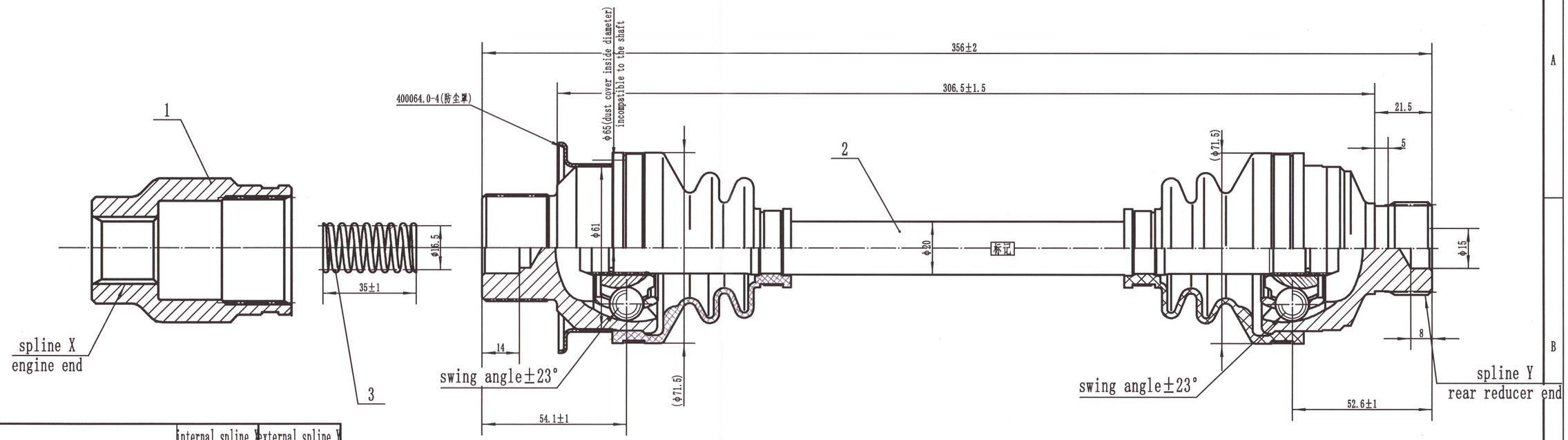

		internal spline X	external spline Y
standards and specifications		GB/T 3478-2008	JIS D2001
tooth root type and mating form		平齿根、齿侧配合	gear flank engagement
number of teeth	Z	18	26
modules	m	1.27	1.25
pressure angle	α_D	30°	20°
Indexing circle diameter	D	φ22.86	φ32.5
base circle diameter	D_b	φ19.797	φ30.54
modification coefficient	X	-0.1028	0.8
minor diameter	D_{ii}	$\phi 21.75^{+0.13}_{0}$	$\phi 32^{0}_{-0.25}$
major diameter	D_{ei}	$\phi 25.15^{+0.2}_{0}$	$\phi 34.8^{0}_{-0.2}$
maximum value of the maximum diameter of the involute starting circle	D_{fe}	φ21.499	φ32
maximum actual tooth thickness	S_{max}	1.933	2.603
minimum actual tooth thickness	S_{min}	1.877	2.545
maximum functional tooth thickness	S_{vmax}	1.90	
minimum functional tooth thickness	S_{vmin}	1.844	
tool fillet radius	R		
measuring rod diameter	D_{Ri}	φ2.5	φ2.5
pitch circle distance	M_R	$18.24^{+0.157}_{0}$	$38.066^{-0.163}_{-0.271}$
cumulative tolerance of tooth pitch	F_p	0.042	0.042
tooth alignment tolerance	F_β	0.015	0.015
circular runout of gear ring	F_r	0.036	0.036
mating part code			

技术要求

1. The maximum swing angle of the fixed-end ball cage universal joint is 46°. The maximum swing torque of the fixed end: 12N.m. The swing is flexible without jamming.
2. The minimum static torsional strength is 1530N·m。
3. Axial clearance: Under ±100N axial force of the drive shaft, the axial clearance of the fixed end ≤ 0.65mm.
4. Circumferential clearance: Under ±10N.m torque in the rotational direction of the drive shaft, the circular rotation angle clearance ≤ 1.5°.
5. Pull-off force requirement: Under the 2000N axial tensile force, the intermediate shaft is not allowed to come out of the universal joint.
6. Service life: 10000 kilometers or not losing efficacy within 1 year of use.
7. During assembly, inject an appropriate amount of Molybdenum disulfide lithium grease into the dust cover of the fixed-end ball cage universal joint, and inject an appropriate amount of Aerospace Lithium Grease into the dust cover of the mobile-end ball cage universal joint.
8. For the dust cover of the ball cage universal joint that can move axially, when assembled and locked with the clamp, it should ensure the same internal and external air pressure.
9. The appearance of the assembly is neat. The bearing stop and oil seal stop surfaces are anti-rust treated. Use a matching film bag of appropriate length for sealing packaging.
10. Mark the middle of the exposed part of the intermediate shaft (in bold 12-size font), including contents: User drawing number + production date.
11. Parts 1 and 3 can be sent separately and do not need to be assembled.

APPROVED
JSC «Russkaya Mekhanika»
Chief Designer
data 010824 signature
/Sergei Molodenov/
JSC "RM" Chief Designer

No.	Darwing No.	Name	Quantity	Material	Single Weight	Total Weight	Note
3	800A-RM-H-000003	Spring of Front drive shaft	1	65Mn-2.0			length 35
2	26200-500-15	Cardan joint rear assy	1				
1	0500A-RM-H-060077	engine coupling	1	20CrMnTi			

标记	处数	分区	更改文件号	签名	年月日	阶段标记	重量	比例
设计			标准化					1:1.5
审核								
工艺			批准			共 张	第 张	

台州金纳车桥有限公司
JINNAIZHOU JINNA AXLE Co.,Ltd.

Cardan joint rear assy

图纸代号 82135607100

所属总成

第一角投影