Office de la Propriété Intellectuelle du Canada
Un organisme d'Industrie Canada

Canadian Intellectual Property Office
An agency of Industry Canada

CA 2653784 C 2016/11/15

(11)(21) **2 653 784**

(12) **BREVET CANADIEN**
CANADIAN PATENT

(13) **C**

(22) **Date de dépôt/Filing Date:** 2007/10/22

(41) **Mise à la disp. pub./Open to Public Insp.:** 2007/12/10

(45) **Date de délivrance/Issue Date:** 2016/11/15

(62) **Demande originale/Original Application:** 2 604 041

(30) **Priorité/Priority:** 2007/03/12 (US60/894,252)

(51) **Cl.Int./Int.Cl.** *B62B 17/02* (2006.01), *B62B 17/04* (2006.01), *B62D 55/07* (2006.01)

(72) **Inventeur/Inventor:**
WRIGHTMAN, ROBERT A., CA

(73) **Propriétaire/Owner:**
WRIGHTMAN, ROBERT A., CA

(74) **Agent:** BLAKE, CASSELS & GRAYDON LLP

(54) **Titre :** ENSEMBLE A SKI DE MOTONEIGE
(54) **Title:** SNOWMOBILE SKI ASSEMBLY

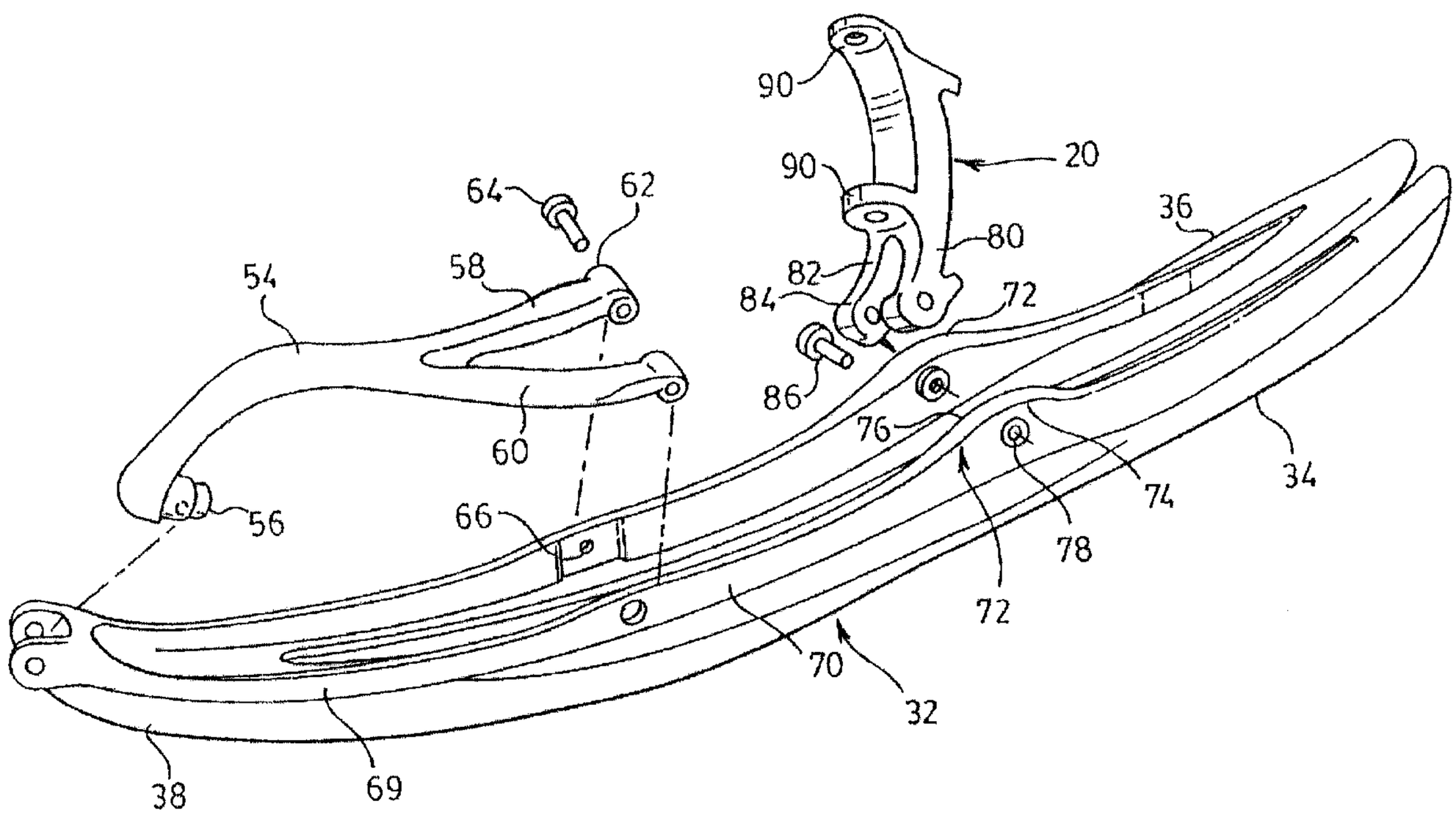

(57) **Abrégé/Abstract:**
A snowmobile ski comprises a body having a pair of rails laterally spaced from one another and interconnected at a tip. A spindle secures the ski to the body and has a pair of legs spaced apart to allow snow to pass freely between the skis and between the legs of the spindle.

ABSTRACT

A snowmobile ski comprises a body having a pair of rails laterally spaced from one another and interconnected at a tip. A spindle secures the ski to the body and has a pair of legs spaced apart to allow snow to pass freely between the skis and between the legs of the spindle.

SNOWMOBILE SKI ASSEMBLY

FIELD OF THE INVENTION

[0001] The present invention relates to snowmobiles in particular to skis for such snowmobiles.

DESCRIPTION OF THE PRIOR ART

[0002] The snowmobile is a well known class of machine and is used for transportation over snow. The snowmobiles typically have a belt to provide traction over the snow at the rear of the machine and a pair of ski's at the front of the machine. The ski's are steerable so that the operator can steer the snowmobile around the desired course.

[0003] Snowmobiles are used in a variety of conditions from ice to fresh snow. As the design of snowmobile has evolved, the skis have themselves become more sophisticated to match the higher performance expectations of the snowmobile. Initially, a single runner was utilized on the underside of the ski to improve lateral traction. However, it was found that a single runner tended to follow the track left by other machines, causing the snowmobile to "dart." A further development used a pair of parallel runners on the underside of the ski. Whilst this mitigates the darting, in certain conditions notably in powder snow, the skis are prone to floating which results in a loss of lateral traction and a resultant loss of steering. This is in part due to the tunnel structure used on the underside of the ski's with the parallel runners. In soft snow, the body of the ski may inhibit the runners from contacting the more solid snow and thereby limit the lateral resistance to that offered by the soft snow.

[0004] It is therefore an object of the present invention to provide a ski for a snowmobile in which the above disadvantages are obviated or mitigated.

SUMMARY OF THE INVENTION

[0005] In general terms, the present invention provides a snowmobile ski having a bifurcated body. The body is formed from a pair of laterally spaced rails which are interconnected at the tip into a unitary construction. Each of the rails has a runner on the underside. In use, the lateral

spacing between the rails permits the snow to pass between the rails and thereby inhibit excessive floating in soft or powder snow conditions.

[0006] Preferably, the ski is supported upon on a spindle whose lower portion is bifurcated to provide passage of the snow past the spindle.

[0007] As a further preference, the ski includes a stabilizer bar extending from the tip to a portion of each of the ski's forward of the spindle. The distal end of the stabilizer bar is bifurcated to facilitate the passage of snow past the stabilizer bar.

BRIEF DESCRIPTION OF THE DRAWINGS

[0008] An embodiment of the invention will now be described by way of example only with reference to the accompanying drawings in which:

[0009] Figure 1 is a side view of a snowmobile.

[0010] Figure 2 is an exploded perspective view of a ski assembly.

[0011] Figure 3 is a view from the underside of the ski assembly shown in Figure 2.

[0012] Figure 4 is a view on the line IV-IV of Figure 3.

[0013] Figure 5 is a view on the line V-V of Figure 3.

[0014] Figure 6 is a section of a portion of a spindle shown in Figure 2.

[0015] Figure 7 is a perspective view of a wheel assembly used with the ski assembly of Figure 2.

DETAILED DESCRIPTION OF THE INVENTION

[0016] Referring therefore to the drawings, a snowmobile generally indicated 10 includes a traction drive 12 supporting a superstructure 14. The forward portion of the superstructure 14 is supported on a suspension assembly 16 that includes suspension arm 18 connected to a spindle 20. The spindle 20 is rotatable about a vertical axis relative to the suspension arm 18 and is connected through a steering link 22 to an operator control 24. The lower end of the spindle 20 is connected to a ski assembly 30 shown in greater detail in Figures 2 through 5.

[0017] It will be appreciated that the ski assembly 30 is similar on each side of the snowmobile except as to hand, and therefore only one such ski assembly will be described in detail. The overall dimensions of the skis will vary from machine to machine but will generally be similar to those found on conventional higher performance snowmobiles and constructed from similar materials.

[0018] Referring therefore to Figure 2, the ski assembly 30 includes a ski 32 typically moulded from a plastics material. The ski 32 has a body 33 formed, a pair of rails 34, 36 that are laterally spaced from one another over substantially the entire length of the ski body 33. The rails 34, 36 are connected at the tip 38 to provide a unitary construction.

[0019] As shown in Figure 4, each of the rails 34, 36 has a under surface 40, 42 respectively that is formed with a concave cylindrical recess 44. The recess 44 is dimensioned to receive a steel runner 46 that is secured in the recess 44 by a bolt (not shown) extending through the body of the rail. The runner 46 has longitudinal slots 48 formed in its lower surface to receive a carbide insert 50. The carbide insert 50 provides a wear resistant insert to the runner 46.

[0020] As can best be seen in Figure 5, the runner 46 extends partially along the under surface 40, 42 of each of the rails 34, 36. The rails 34, 36 are formed with an aperture 52 which permits the runner 46 to pass through the rail from the lower surface to the upper surface. The runner 46 extends toward and across the tip 38 of the ski 32, as shown in dotted lines in Figure 3, so as to form a continuous runner along each of the rails 34, 36. The continuous runner enhances the strength for high performance.

[0021] As best seen in Figure 2, a stabilizer bar 54 is secured to the tip 38 through a universal joint assembly 56 and extends rearwardly for attachment to the ski. The stabilizer bar 54 is bifurcated so as to provide a pair of arms 58, 60 that progressively diverge in a rearward direction. The distal end of each of the arms 58, 60 is formed with a bushing 62 that receives a connecting bolt 64. The bushing 62 may be elastomeric or steel bushings depending upon the application and the bolts 64 are received in holes 66 formed in an upstanding flange 70 formed on the upper surface of each of the rails 34, 36. The flange 70 extends from the tip 38 along the rails 34, 36 and includes a socket 72 to receive the spindle 20 and provide a mounting pointfor the ski body 33. The socket 72 has a pair of laterally spaced walls 74, 76 with reinforced holes 78 integrally formed with the walls 74, 76.

[0022] The spindle 20 is bifurcated at its lower end to provide a pair of legs 80, 82 that are received in respective ones of the sockets 72 between the walls 74, 76. The legs 80, 82 have lateral bores 84 for alignment with the reinforced holes 78 to receive connecting bolts 86. The spindle 20 is connected to the suspension arms through mounting holes 90 in conventional manner.

[0023] As can best be seen in Figure 6, legs 80, 82 on spindle 20 terminate in a bore 92 that is asymmetric in cross section. As shown, the bore 92 is part cylindrical with a flat on one side to provide a D shaped cross section. A hole 94 extends through the walls of the bore 92. A wheel assembly indicated 100 in Figure 7 includes a wheel 102 supported on spindle 104 at the lower end of a vertical leg 106. The vertical leg 106 is dimensioned at its upper end to be received in the bore 92. A hole 110 extends through the leg 106 for alignment with the hole 94 in the legs 80, 82 so that a securing pin 112 may hold the wheel 100 in situ such that the axle is perpendicular to the length of the ski. Vertical leg 106 has shoulders (not shown) mating with the spindle to support the weight of the machine on the ground, thereby decreasing stress on securing pin 112.

[0024] In use on snow, the laterally spaced ski rails 34, 36 provides support for the runner 46. Flotation of the ski body 32 is inhibited by permitting the snow to pass between the ski rails 34, 36 and thereby allow the runner 46 to descend through soft snow to a firmer stratum of packed snow. The bifurcation of the stabilizer bar 56 and the spindle 20 provides a clear passage for the snow through the ski assembly 32 to minimize build up of snow and drag.

[0025] The spindle 20 secures the two ski rails 34, 36 to one another whilst permitting limited independent flexure as the ski assembly passes over the snow. The runner 46 contributes to the torsional resilience and bending strength of the ski whilst providing an enhanced contact with the firm or packed snow. A continuous runner is preferred for improved performance but it will be appreciated that a pair of runners may be used, one on each rail 34, 36, for less arduous conditions.

[0026] If it is necessary to transport the snowmobile over open ground, the wheel assembly 100 may be inserted between the rails 34, 36 and secured in the bore 92. The locking pin may then be inserted through the holes 94 and 110 to lock the wheels in position below the ski assembly. In this manner, the under side of the skis are elevated from the ground allowing the

machine to be rolled along the ground without damage to the skis. The D shaped cross section inhibits rotation of the wheel about a vertical axis with the weight transferred along the spindle 20 so as not to load the locking pin 112.

CLAIMS:

1) A spindle to connect a snowmobile ski to a snowmobile, said spindle having a body with a pair of laterally spaced legs extending from said body in spaced relationship for connection to said ski, distal ends of each leg having a connection for connecting said legs to a respective mounting point on a ski, said connections being spaced from one another and each of said connections having an inwardly directed surface, said surfaces being spaced from one another to provide an unencumbered gap between said connections, whereby, in use, snow may pass freely between said connections and between said legs.

2) A spindle according to claim 1 wherein each of said connections includes a bore to receive a pin for pivotally connecting said spindle to said ski.

3) A spindle according to claim 1 wherein said spindle includes a bore in said body between said legs.

4) A spindle according to claim 3 wherein said bore is asymmetric.

5) A spindle according to any one of claims 1 to 4 wherein said body includes a head having a pair of mounting points for suspension components spaced apart long a longitudinal axis and said legs project from said head and along said longitudinal axis.

6) A spindle according to claim 5 wherein each of said a mounting points defines a pivot axis for the suspension component connected thereto.

7) A snowmobile comprising a superstructure supported at one end on a drive belt to provide a traction drive, and at an opposite end on a suspension assembly, said suspension assembly including a pair of steerable ski assemblies laterally spaced relative to said superstructure and connected to said superstructure by respective suspension arms, each of said ski assemblies including a spindle rotatably mounted to said suspension arm for movement about a steering axis and connected to a steering control to effect steering of said snowmobile, and a ski connected to said spindle for movement about a transverse axis, each of said skis including a body with a pair of rails spaced from one another to define an elongate gap through which snow may pass from the underside of each ski to the top side, said rails being connected at their tip to provide a unitary

structure, each of said spindles being bifurcated to provide a pair of legs, each of which has an inwardly directed surface, said legs being arranged to space said inwardly directed surfaces from one another with each leg connected to a respective one of said rails, said skis being positioned on said snowmobile to permit flow of snow through said gap upon movement of said snowmobile over snow and said legs and said rails being aligned to provide an unimpeded passage of snow between said rails and legs when said snowmobile is driven by said belt.

8) A snowmobile according to claim 7 wherein each of said ski assemblies includes a stabilizer bar extending from said tip to each of said rails.

9) A snowmobile according to claim 8 wherein said stabilizer is bifurcated to provide a pair of arms to facilitate passage of snow between said rails.

10) A snowmobile according to claim 7 wherein each of said spindles includes a head and said legs depend from a respective one of said heads, said suspension arm being rotatably connected to said head.

11) A snowmobile according to claim 10 wherein a steering link is connected to said head at a location offset from said suspension arm and is operably connected to said steering control.

12) A snowmobile according to claim 11 wherein a pair of suspension arms are connected to said head.

13) A snowmobile according to claim 7 wherein each of said legs is received in a socket formed on the top side of a respective one of said skis.

14) A snowmobile according to claim 13 wherein said leg is pivotally connected to said socket for rotation about a transverse axis.

15) A snowmobile according to claim 14 wherein said sockets are formed by a pair of upstanding walls and a pin extends between said walls and through said leg.

16) A snowmobile according to claim 7 wherein a runner is provided under each of said rails to provide a pair of laterally spaced runners for each of said skis.

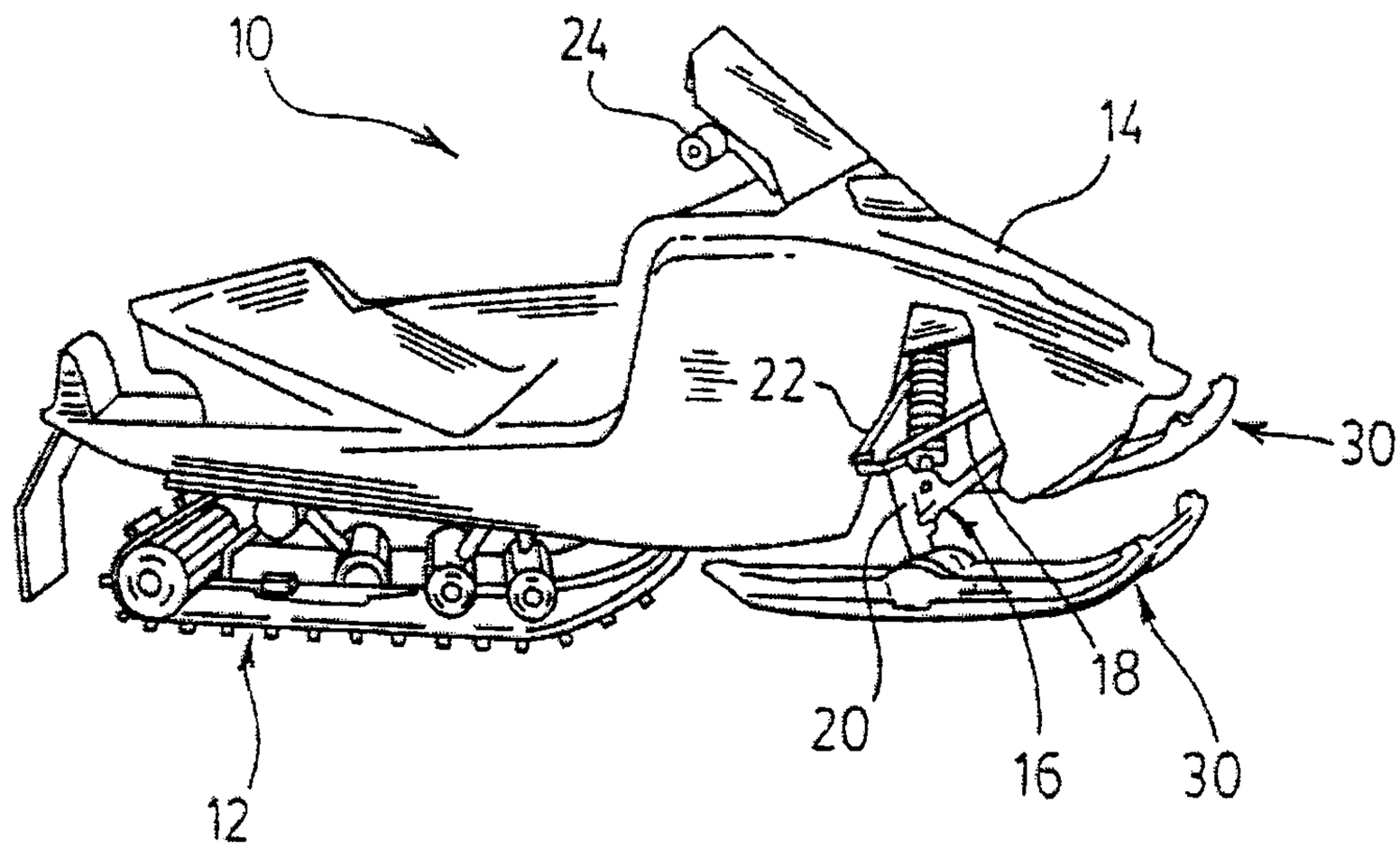

FIG. 1.

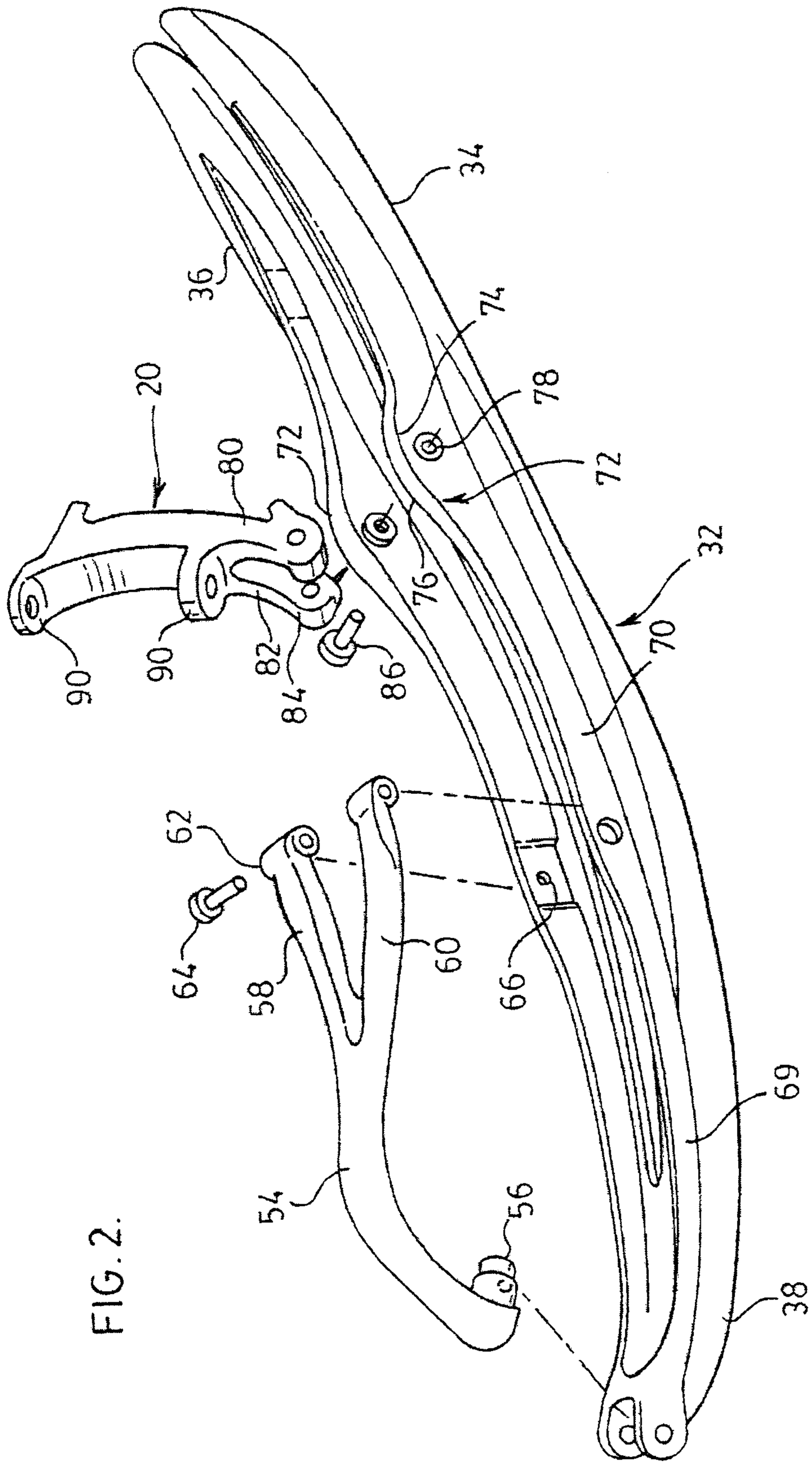
34
36
74
78
20
80
72
72
32
76
70
90
90
82
84
86
62
64
58
60
66
69
54
56
38

FIG. 2.

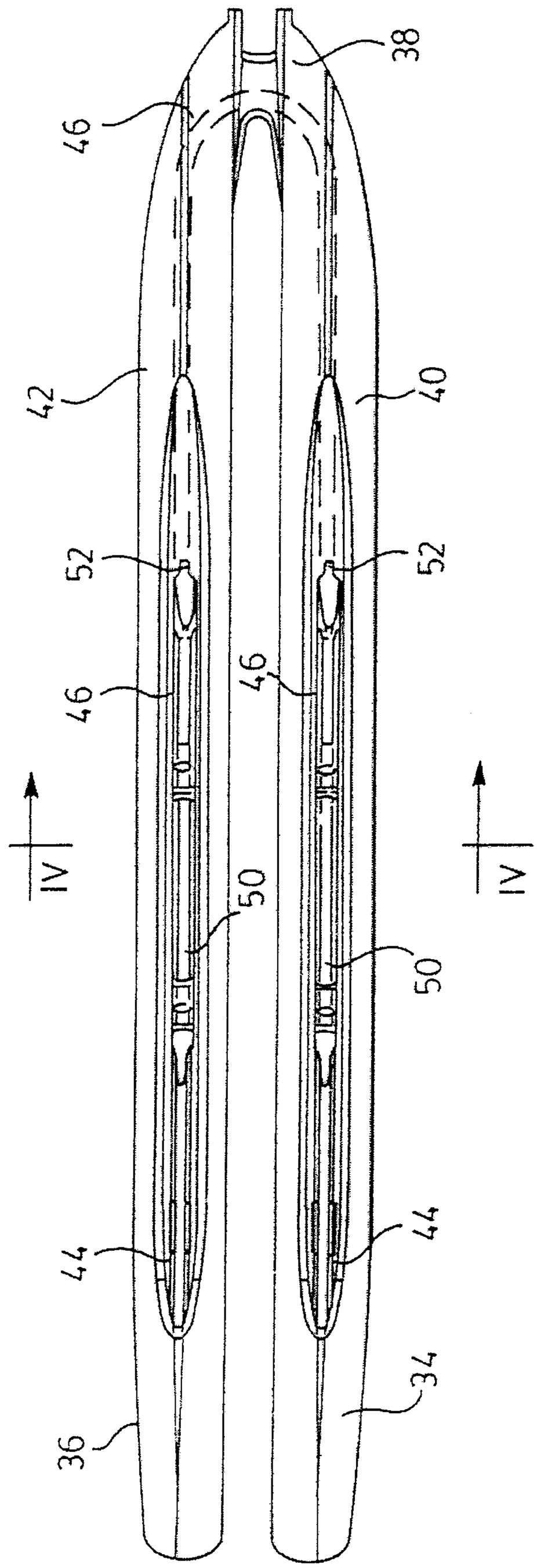

FIG. 3.

FIG. 4.

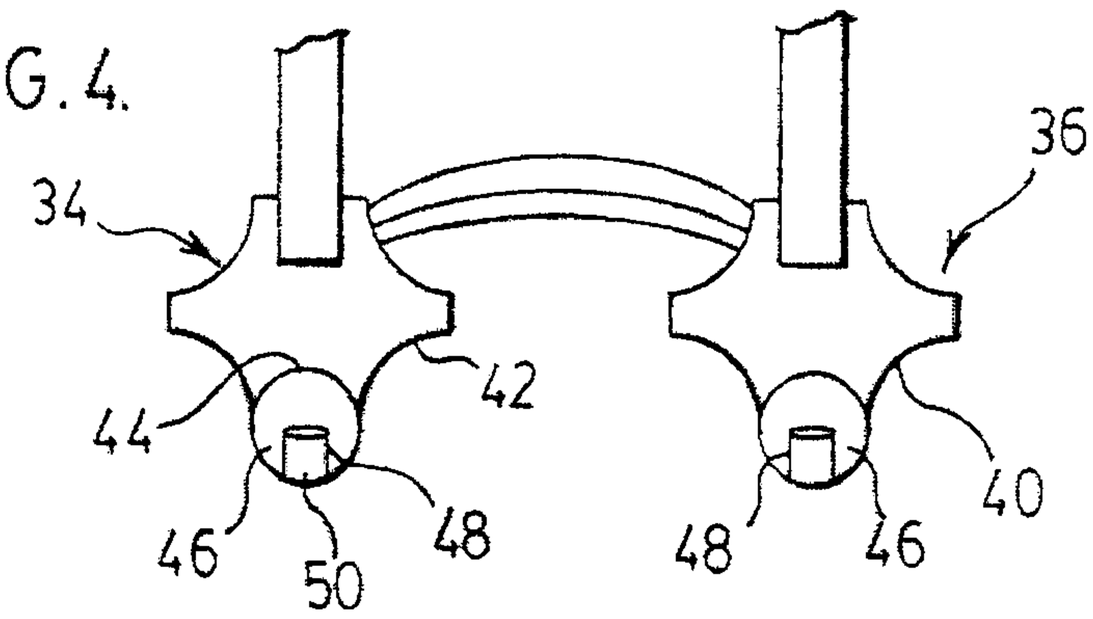

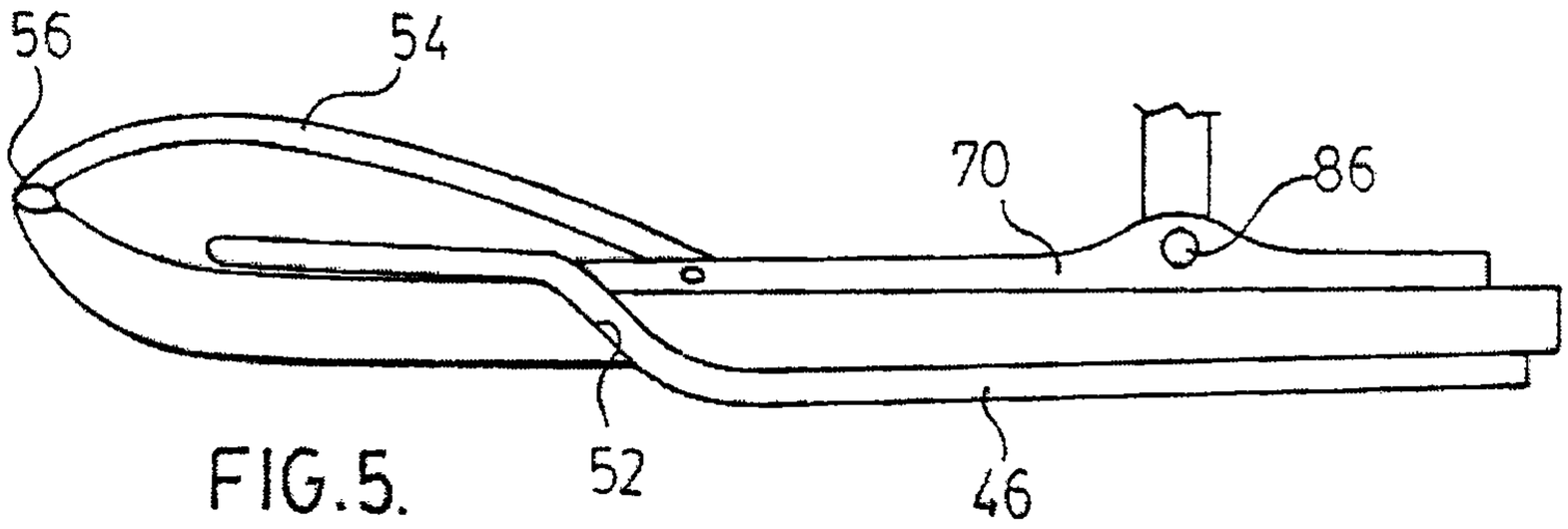

FIG. 5.

FIG. 6.

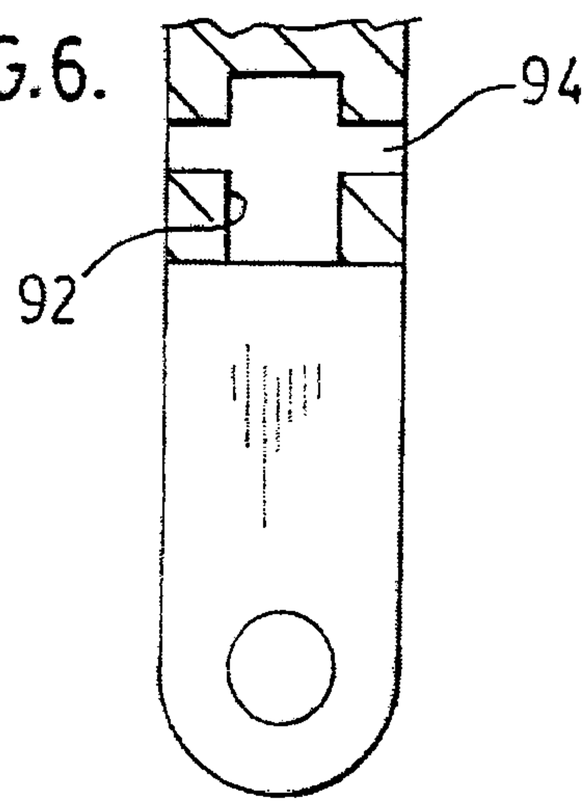

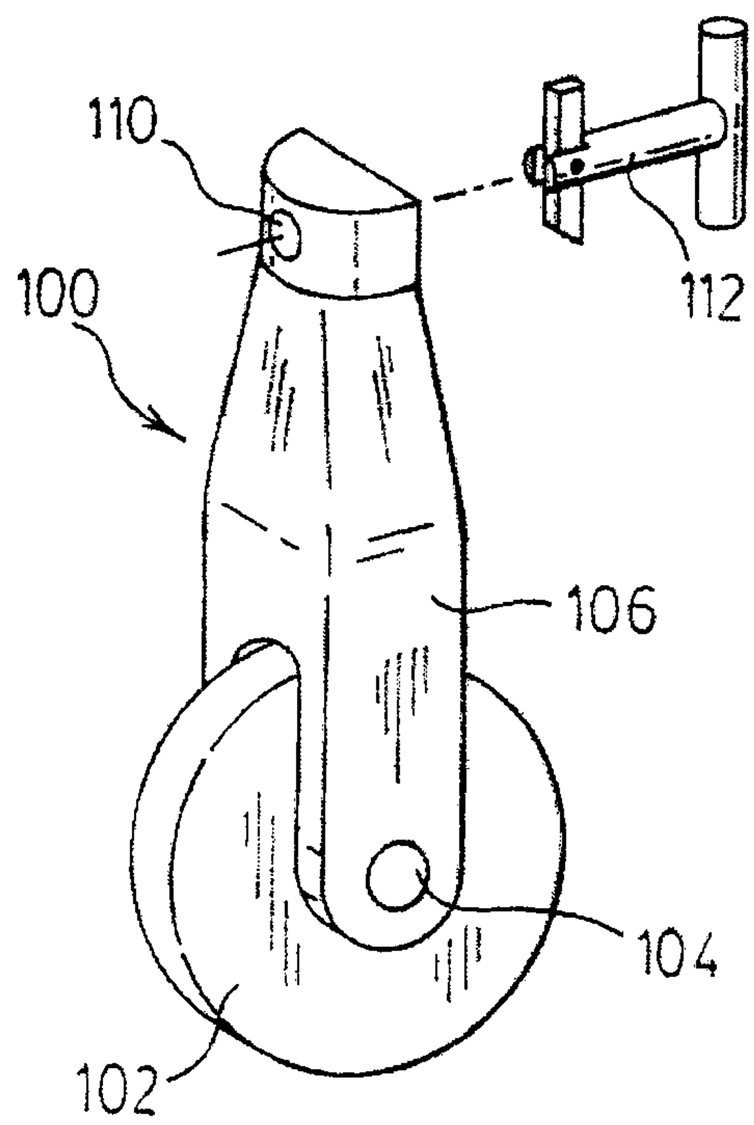

FIG. 7.

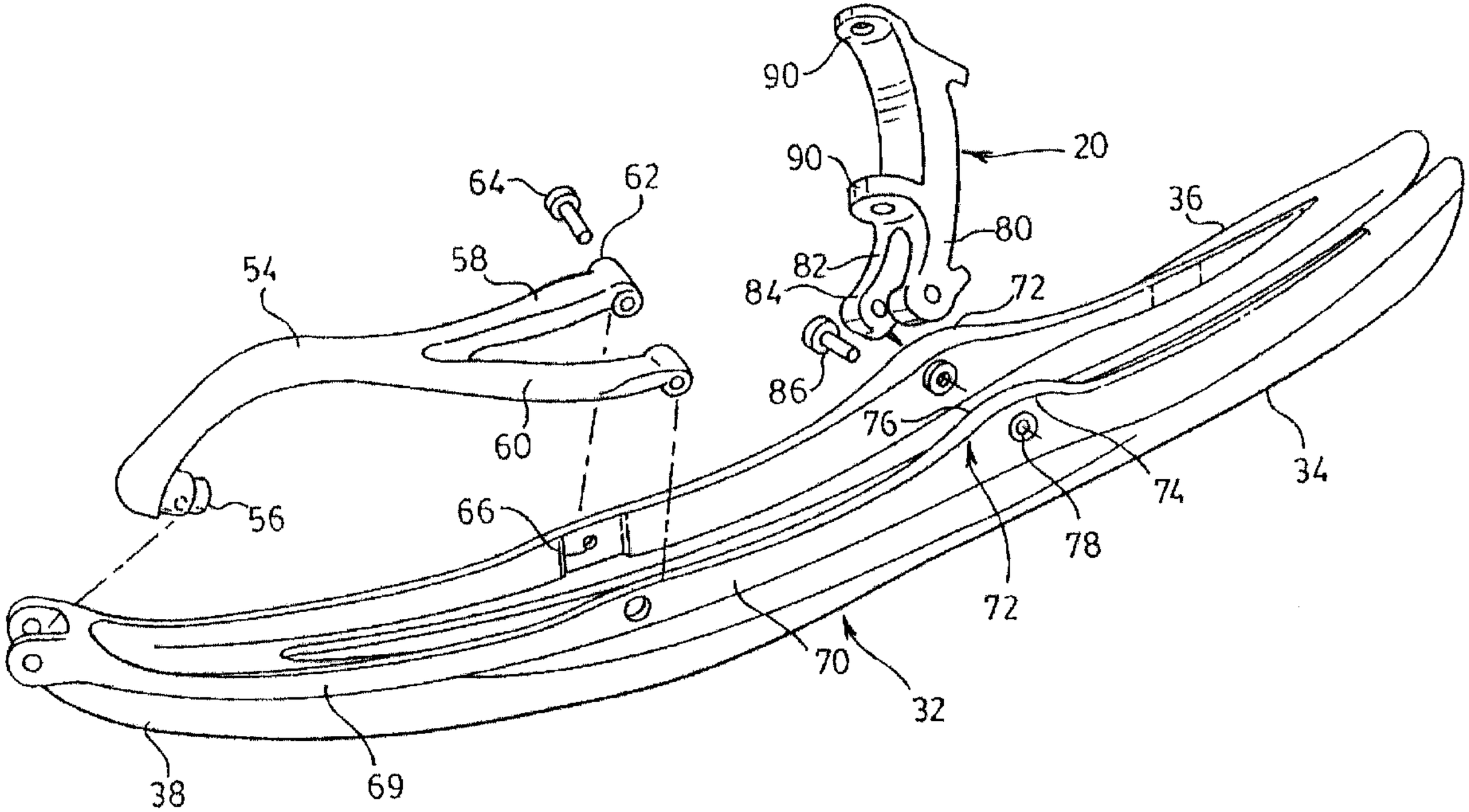
90
90
20
64
62
36
80
58
82
54
84
72
86
76
60
74
34
56
66
78
72
70
32
38
69