US006715575B2

(12) **United States Patent**
Karpik

(10) **Patent No.: US 6,715,575 B2**
(45) **Date of Patent: Apr. 6, 2004**

(54) **TRACK TENSIONING SYSTEM FOR A TRACKED VEHICLE**

(75) Inventor: **Gerard J. Karpik**, Eveleth, MN (US)

(73) Assignee: **Formula Fast Racing**, Eveleth, MN (US)

(*) Notice: Subject to any disclaimer, the term of this patent is extended or adjusted under 35 U.S.C. 154(b) by 0 days.

(21) Appl. No.: **10/214,004**

(22) Filed: **Aug. 7, 2002**

(65) **Prior Publication Data**

US 2003/0034191 A1 Feb. 20, 2003

Related U.S. Application Data

(60) Provisional application No. 60/312,713, filed on Aug. 16, 2001, and provisional application No. 60/314,519, filed on Aug. 22, 2001.

(51) **Int. Cl.**[7] **B62M 27/02**

(52) **U.S. Cl.** **180/193**; 180/190; 180/9.5; 305/143

(58) **Field of Search** 180/193, 190, 180/9.5, 9.56; 305/127, 143, 151, 153

(56) **References Cited**

U.S. PATENT DOCUMENTS

3,089,710	A	5/1963	Fiala
3,115,945	A	12/1963	Dry et al.
3,527,505	A	9/1970	Hetteen

(List continued on next page.)

FOREIGN PATENT DOCUMENTS

CA	895747	3/1972
CA	942802	2/1974
CA	944001	3/1974
CA	956674	10/1974
CA	994395	8/1976
CA	1026807	2/1978
CA	1029425	4/1978
FI	850110	7/1986
FI	901451	9/1991
FR	1035475	4/1953

OTHER PUBLICATIONS

Boyum, Pivoting Track Tensioning System for a Tracked Vehicle, Nov. 21, 2002, US Patent Application Publication 2002/0171290 A1.*

Primary Examiner—Lesley D. Morris
Assistant Examiner—Tony Winner
(74) *Attorney, Agent, or Firm*—Faegre & Benson LLP

(57) **ABSTRACT**

A suspension system for suspending an endless track beneath a tracked vehicle chassis. The suspension system can be a fully coupled suspension, a partially coupled suspension or a non-coupled suspension. The suspension system includes at least one elongated suspension rail having a front portion, a rear portion and a bottom track-engaging portion. At least one suspension arm has an upper end adapted for pivotal connection to the vehicle chassis and a lower end pivotally connected to the suspension rail. The lower end of the suspension arm can optionally have a displacement with a non-linear component. A biasing mechanism provides a biasing force to bias the suspension rail away from the vehicle chassis. The track tensioning system coupled to the suspension arm applies a tensioning force to the endless track in response to displacement of the suspension arm. The tensioning force generates a supplemental force transmitted by the endless track that augments the biasing force of the biasing mechanism. In a suspension system with front and rear suspension arms, the track tensioning system can be coupled to the front or rear suspension arms.

30 Claims, 12 Drawing Sheets

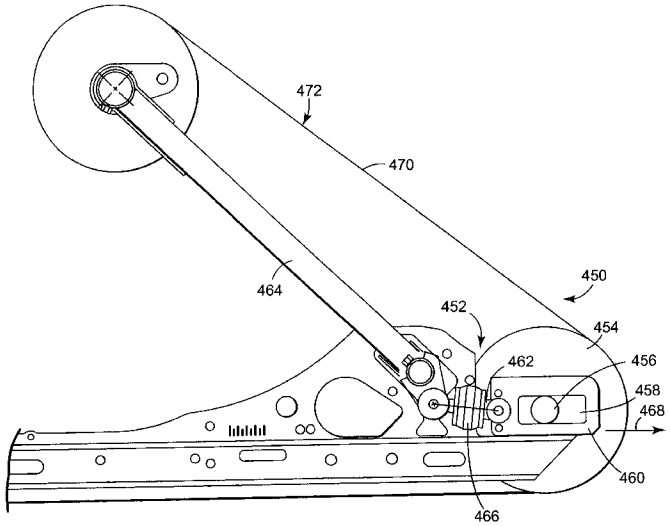

U.S. PATENT DOCUMENTS

3,623,563 A 11/1971 Gostomski
3,637,265 A 1/1972 Valentine et al.
3,658,392 A 4/1972 Perreault et al.
3,711,164 A 1/1973 Chaumont
3,721,308 A 3/1973 Brandei et al.
3,727,709 A 4/1973 Newman
3,744,583 A 7/1973 Bedard
3,788,412 A 1/1974 Vincent
3,879,092 A 4/1975 Rose
3,913,693 A 10/1975 Hale et al.
3,913,694 A 10/1975 Forsgren
3,933,213 A 1/1976 Trowbridge
3,944,005 A 3/1976 Tomita
3,966,181 A 6/1976 Lessard
4,057,916 A 11/1977 Roemer
4,222,453 A 9/1980 Fixsen et al.
4,337,958 A 7/1982 Witt et al.
4,407,386 A 10/1983 Yasui et al.
4,489,954 A 12/1984 Yasui et al.
4,518,056 A 5/1985 Kobayashi
4,671,521 A 6/1987 Talbot et al.
4,690,234 A 9/1987 Takada
4,699,229 A * 10/1987 Hirose et al. 180/9.21
4,700,815 A 10/1987 Persicke et al.
4,987,965 A 1/1991 Bourret
5,014,805 A 5/1991 Uchida
5,029,664 A 7/1991 Zulawski
5,203,424 A 4/1993 Gogo et al.
5,265,692 A 11/1993 Mallette
5,370,198 A 12/1994 Karpik
5,533,585 A 7/1996 Kawano et al.
5,667,031 A 9/1997 Karpik
5,692,579 A 12/1997 Peppel et al.
5,727,643 A 3/1998 Kawano et al.
5,829,545 A 11/1998 Yamamoto et al.
5,881,834 A 3/1999 Karpik
5,904,217 A 5/1999 Yamamoto et al.
5,944,134 A 8/1999 Peppel et al.
5,947,220 A 9/1999 Oka et al.
6,032,752 A 3/2000 Karpik et al.
6,142,494 A 11/2000 Higuchi
6,170,589 B1 1/2001 Kawano et al.
6,206,124 B1 3/2001 Mallette et al.
6,315,374 B1 * 11/2001 Johansson 305/145

* cited by examiner

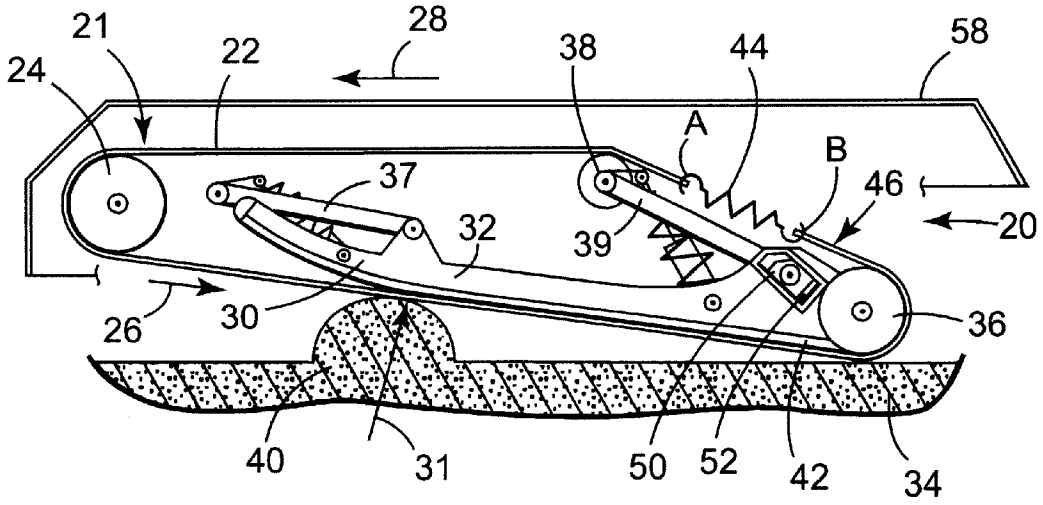
21
22
28
38
44
58
24
A
B
37
46
20
32
39
26
30
36
40
31
50
52
42
34

Fig. 1

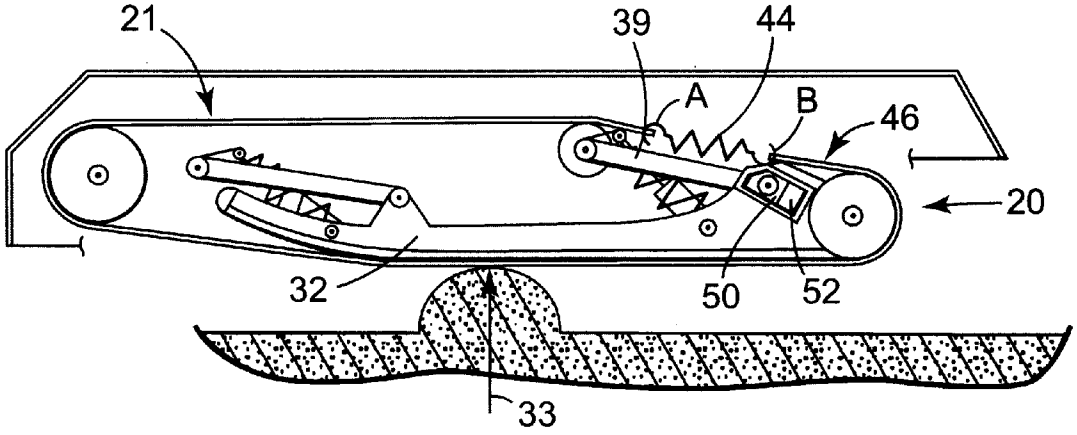
21
39
44
A
B
46
20
32
50
52
33

Fig. 2

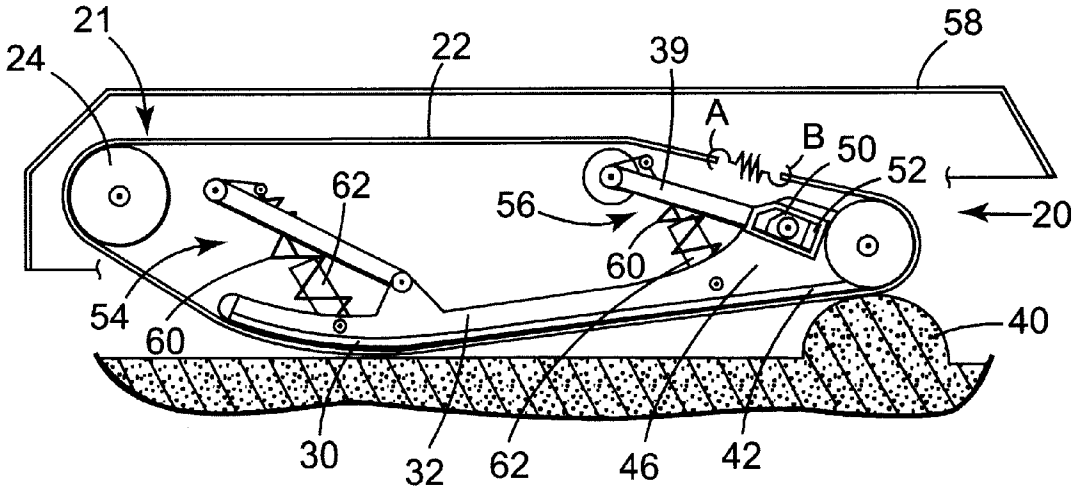
21
24
22
39
58
A
B
50
52
62
56
20
60
54
60
40
30
32
62
46
42

Fig. 3

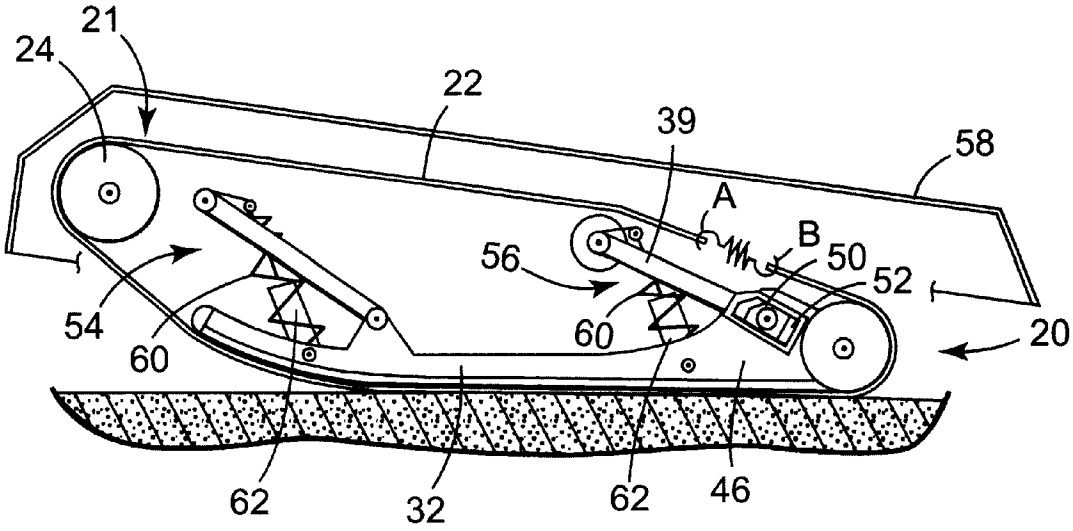
21
24
22
39
58
A
B
50
52
56
54
60
60
20
62
32
62
46

Fig. 4

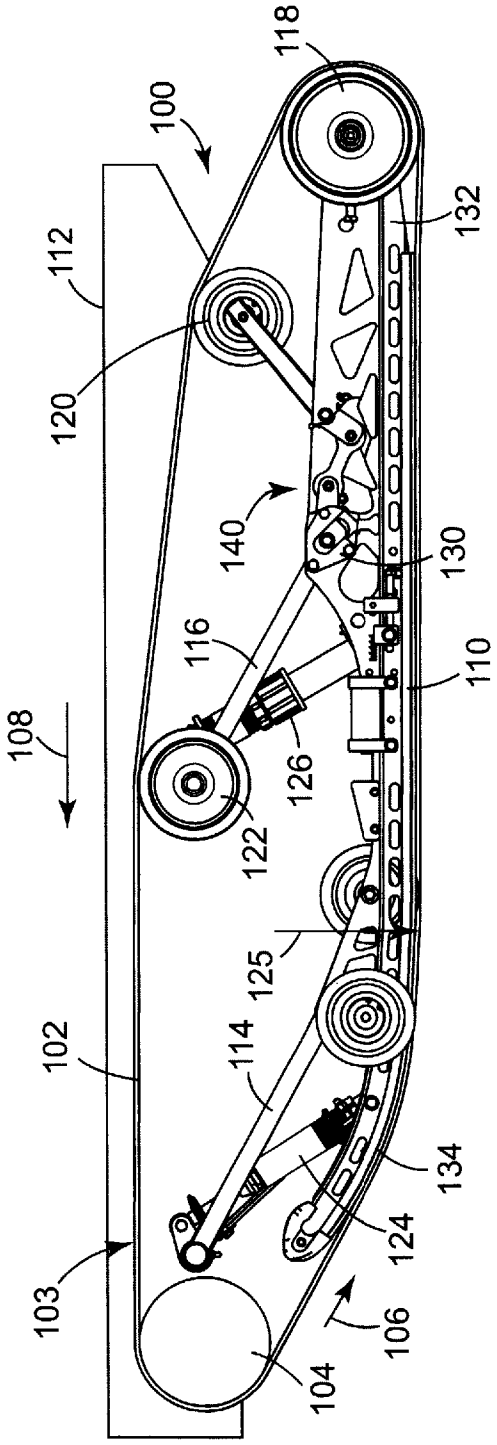
100
102
103
104
106
108
110
112
114
116
118
120
122
124
125
126
130
132
134
140

Fig. 5

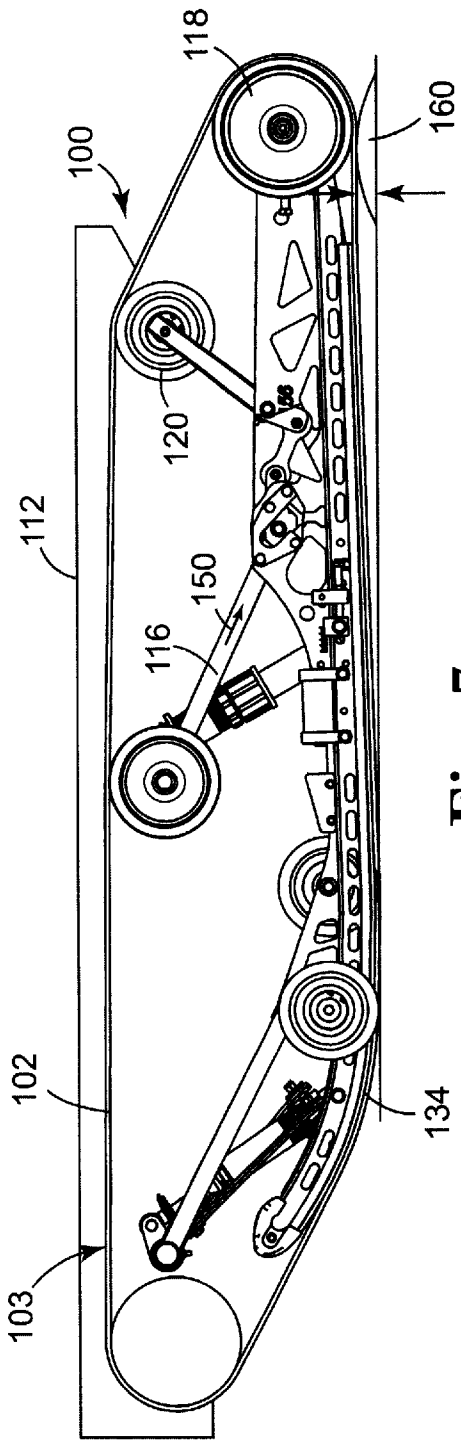
100
102
103
112
116
118
120
134
150
160

Fig. 7

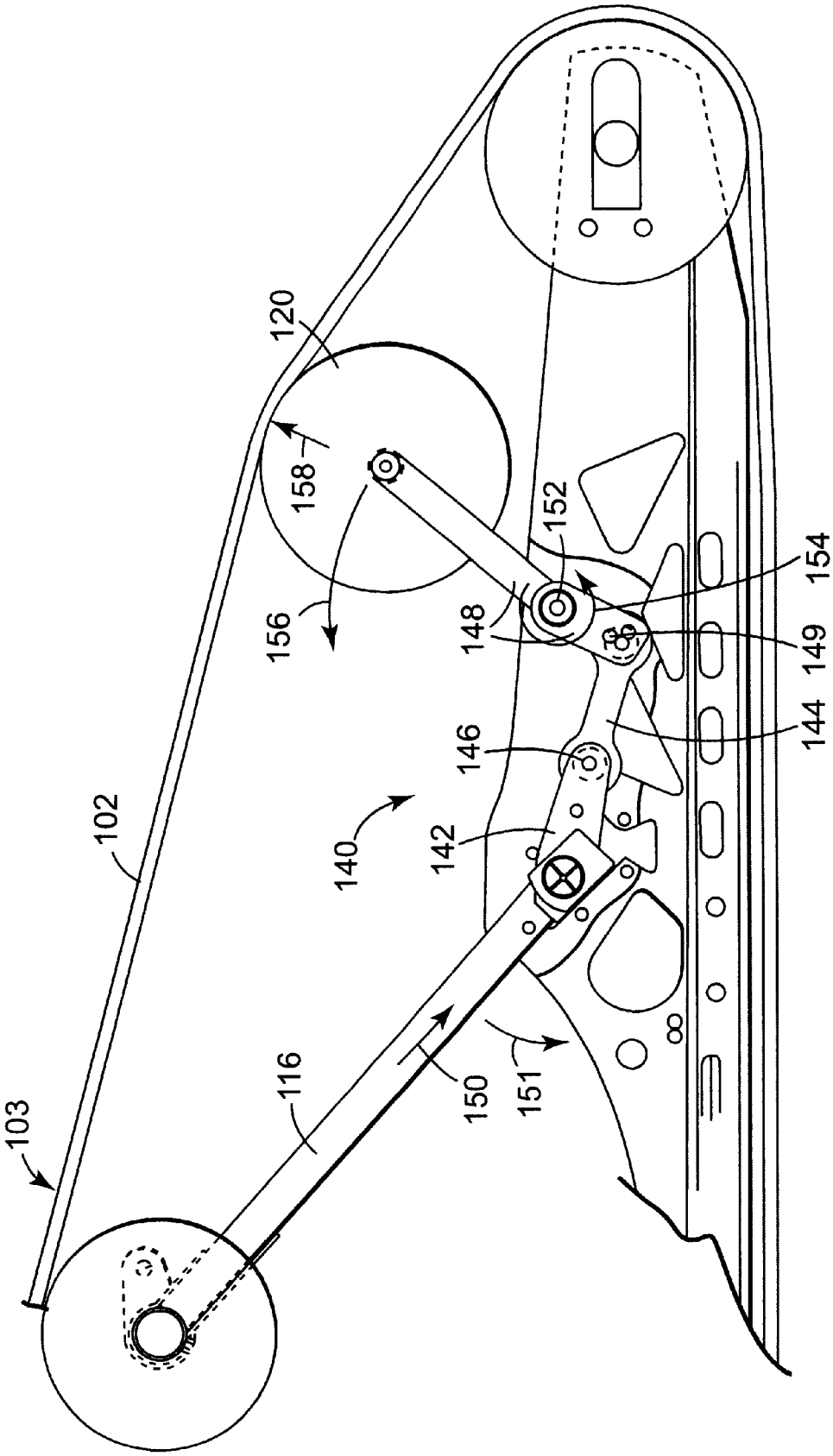

Fig. 6

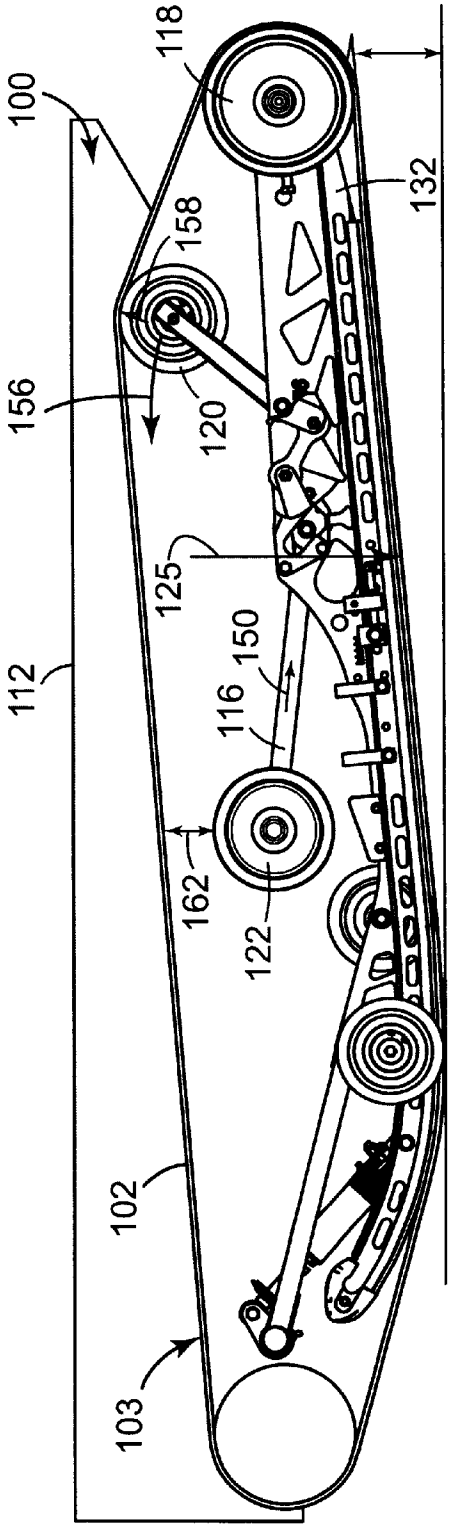
100
118
132
158
156
120
125
150
116
112
162
122
102
103

Fig. 8

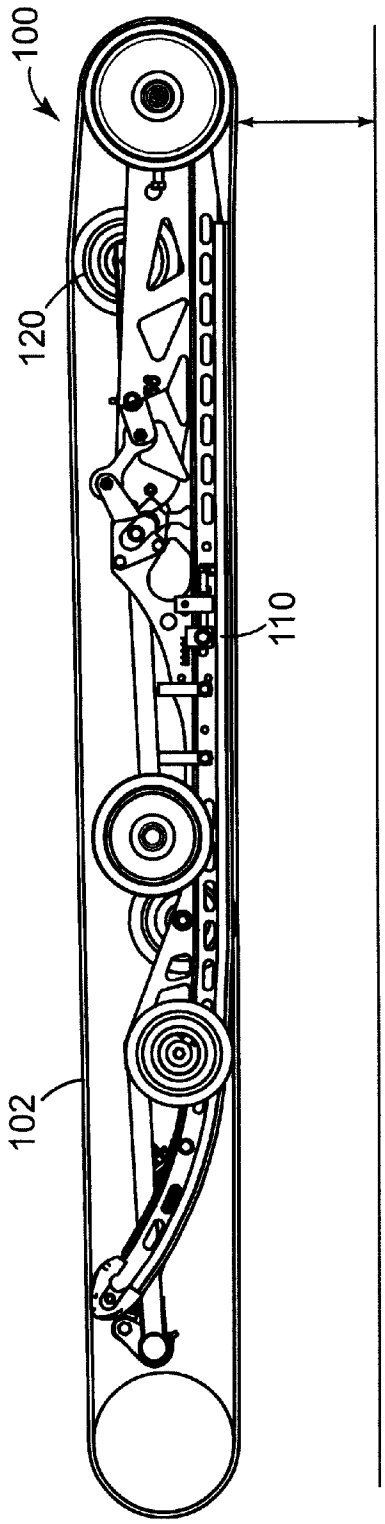
100
120
110
102

Fig. 9

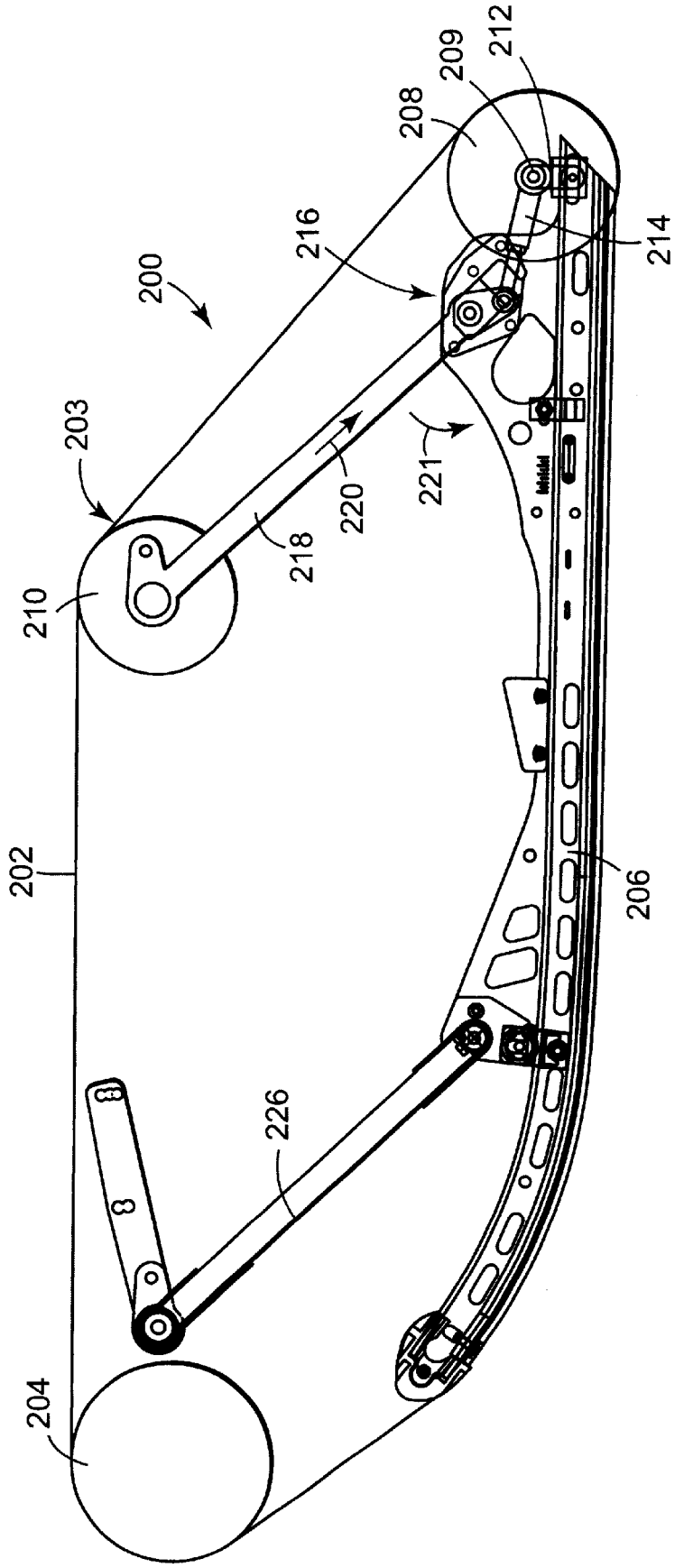

Fig. 10

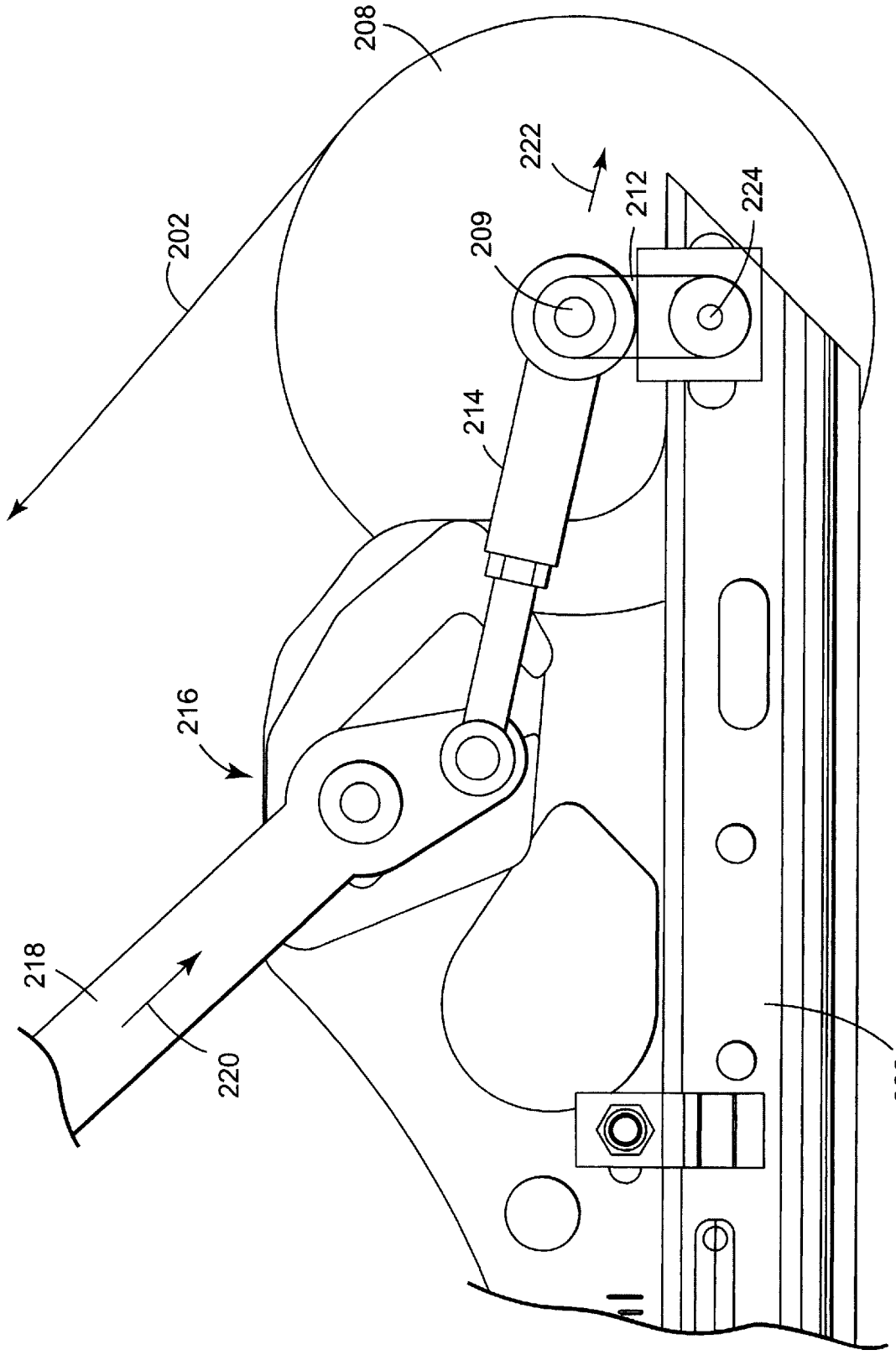

Fig. 11

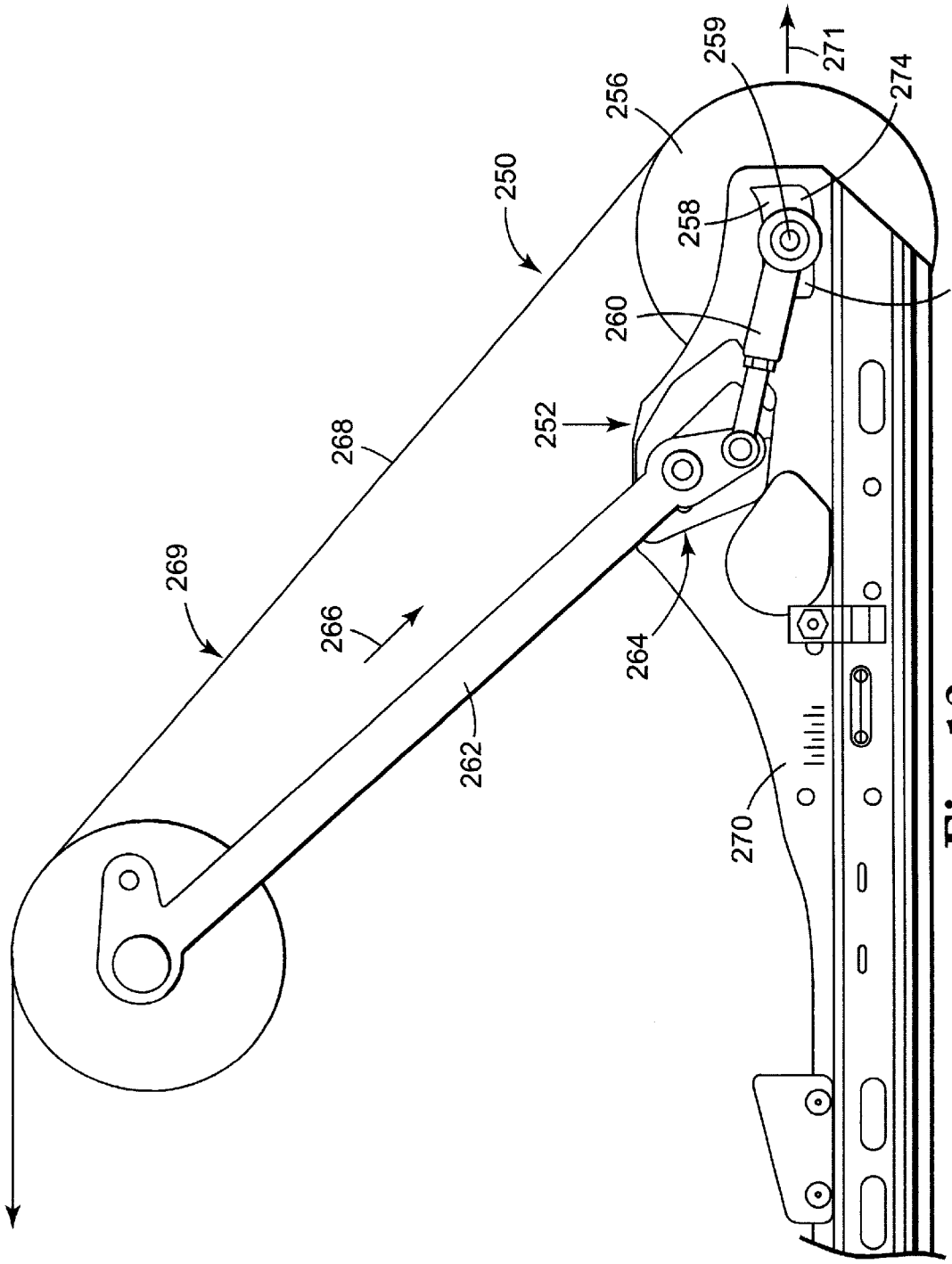

Fig. 12

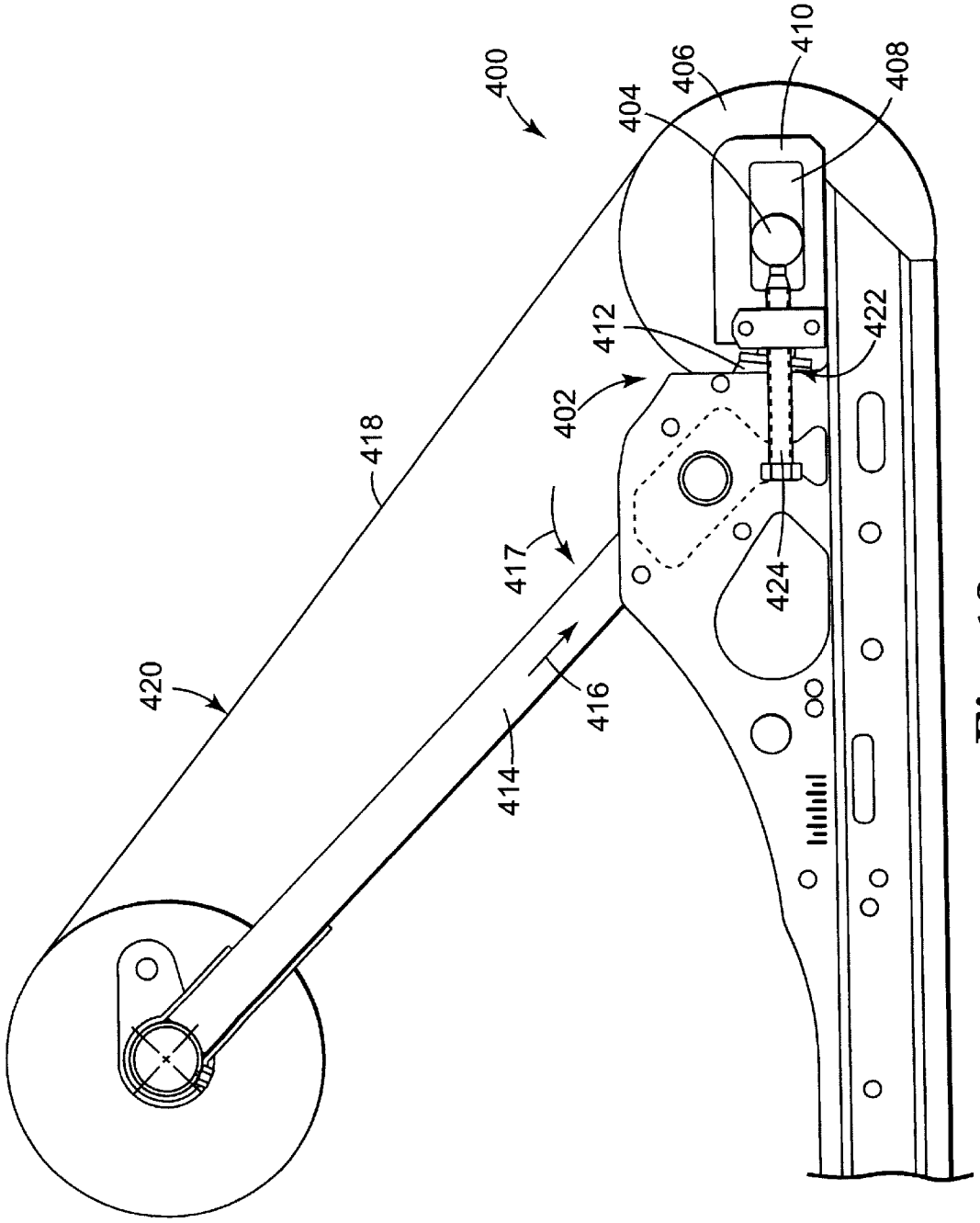

Fig. 13

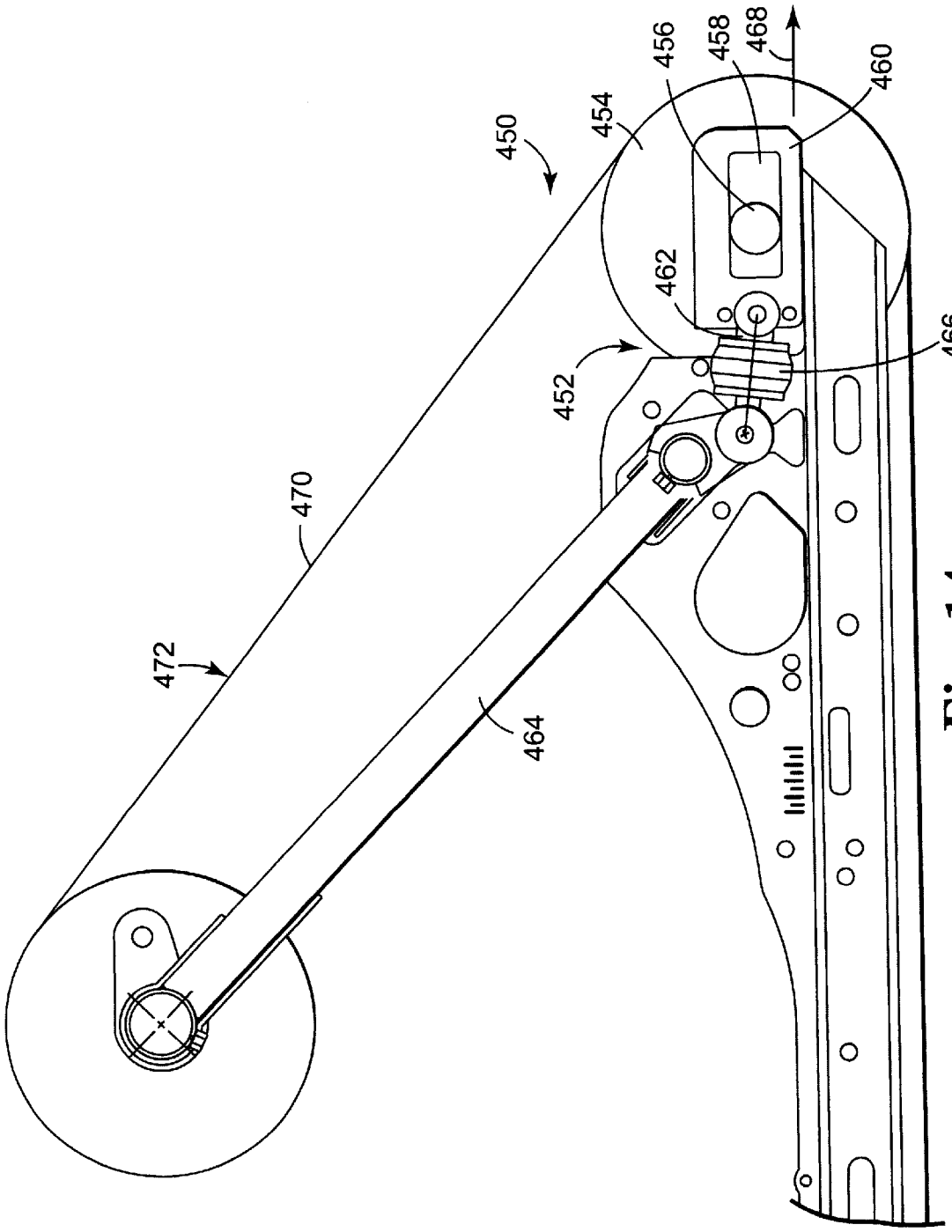

Fig. 14

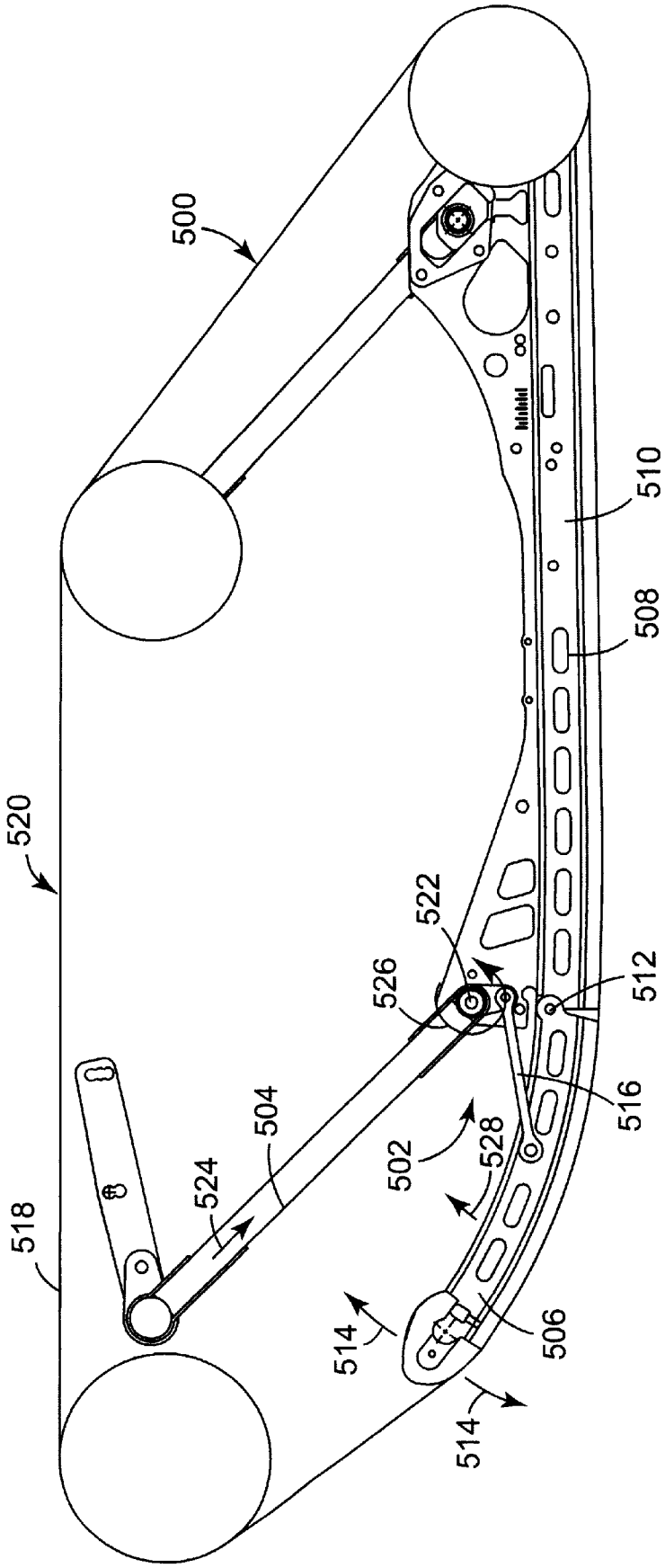

Fig. 15

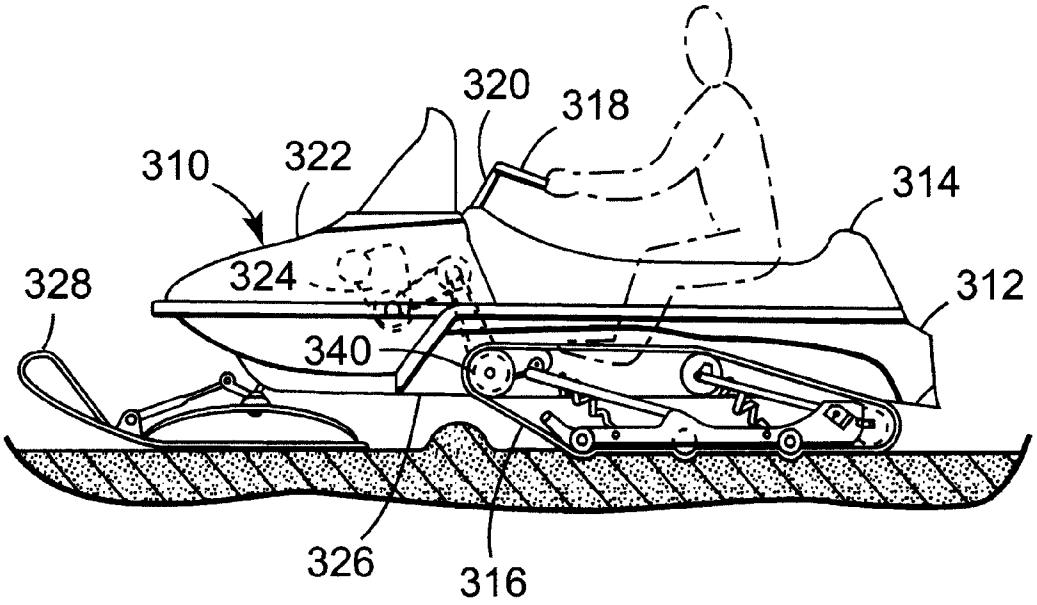

Fig. 16

TRACK TENSIONING SYSTEM FOR A TRACKED VEHICLE

CROSS REFERENCE TO RELATED APPLICATIONS

The present invention claims the benefit of U.S. patent application Ser. No. 60/312,713 entitled "Track Tensioning System For A Tracked Vehicle", filed Aug. 16, 2001 and U.S. patent application Ser. No. 60/314,519, entitled "Track Tensioning System For A Tracked Vehicle", filed Aug. 22, 2002.

FIELD OF THE INVENTION

The present invention relates to a track tensioning system for tracked vehicles, and more particularly, to a system that uses the endless track as a spring to resist suspension displacement caused by certain types of displacement forces.

BACKGROUND OF THE INVENTION

Tracked vehicles, such as snowmobiles, have rear suspension systems generally including front and rear suspension arms pivotally mounted on a shaft rotatably connected to the frame of the tracked vehicle and a slide frame comprising a pair of laterally spaced suspension rails or longitudinal skids interconnected transversely on opposite sides of the machine. The suspension rails are in sliding contact with an endless belt that provides ice and snow surface contact and friction drive for the tracked vehicle. Where the movement of the suspension arms relative to the suspension rail is substantially limited to rotational motion, the suspension system referred to as fully coupled. As used herein, "fully coupled" means a suspension system where a displacement of any portion of the suspension rail causes immediate movement of the entire suspension rail, such as for example where the suspension forms parallelogram configuration.

In many current arrangements, a shackle or sliding block mechanism interconnects the rear suspension arm and the suspension rails to permit relative movement that includes a non-rotational component, such as a lateral or a longitudinal linear component (also referred to as lost motion). Such suspension systems are referred to as non-coupled. As used herein, "non-coupled" refers to a suspension system in which displacement of the rear suspension arm relative to a suspension rail includes a linear component.

The non-coupled configuration allows the front and rear suspension arms to operate independent of one another, which was thought advantageous in the prior art because of favorable weight transfer characteristics that enhance traction. This independence, however, was found to result in rough and unsteady rides for the rider, particularly when the rear suspension of the track encounters an elevated mound of ice or snow or the upward side of a depression. This instability detracts from the enjoyment and the utility of the vehicle since there are many areas which, when traversed, will unduly subject the rider to severe jolts and stress.

The independent movement of the front and rear suspension arms adversely affects the tracked vehicle in several ways. First, track tension is not adequately maintained when there is extreme deflection of either one of the front or rear suspension arms. Extreme variations in track tension can reduce the comfort, control, track life and ultimately the safety of the rider.

Second, independent movement of the front and rear suspension arms in a non-coupled system requires the associated springs and shock absorbers to be sprung and dampened more stiffly because each must individually support the high loads when impact occurs at either the front or rear extreme of the suspension rails. That is, the springs and shock absorbers of each suspension arm must be stiff enough to withstand and control the full impact of the bump and weight of the tracked vehicle by itself. The required stiffness of the spring and shock absorber results in a less comfortable on normal terrain.

Third, when the front suspension arm of a non-coupled suspension deflects as it contacts a bump, the front suspension arm deflects more than the rear suspension arm. This results in an angle of incidence between the suspension rails and the bump. Unless the impact is then large enough to compress the rear suspension arm spring and shock absorber assembly, thereby flattening the angle of incidence, the suspension rails will act as a ramp forcing the rear of the tracked vehicle upward. At low to moderate speeds, the suspension rails angle in an upward incline due to the greater deflection of the front suspension arm than the rear suspension arm, causing the tracked vehicle to hop over the bump, imparting a secondary jolt that increases in intensity with the speed of the tracked vehicle.

These problems were successfully addressed in by the partially coupled suspension systems disclosed in U.S. Pat. No. 5,370,198 (Karpik); U.S. Pat. No. 5,667,031 (Karpik) and U.S. Pat. No. 5,881,834 (Karpik)(hereinafter "the Karpik Patents"). The Karpik Patents disclose a coupling system that permits some independent movement of the rear suspension arm relative to the front suspension arm. Once the rear suspension arm reaches the limit of its independent motion, the system becomes fully coupled.

The coupling system can also serve as a weight transfer mechanism that transmits an increasing percentage of the tracked vehicle's weight to the front suspension arm and the forward end of the slide rail. Through the coupling system, the work of the spring and shock absorbers is shared by the front and rear suspension arms. By sharing forces acting on the suspension system generally between the front and rear suspensions arms, it is possible to use softer shock and spring calibrations than normally would be required to prevent the suspension system from bottoming out. The resulting softer shock and spring calibrations provide a more comfortable ride in normal terrain.

Assuming that the coupling system distributes forces acting on the suspension system between the front and rear suspension arms, the springs and shock absorber at the front suspension arm carries a portion of the force and the rear suspension arm carries the remainder of the force. The minimum theoretical shock and spring calibration must be set to handle the maximum anticipated force the suspension system will encounter. In order to maximize ride comfort on normal terrain, what is needed is a suspension system that reduces the shock and spring calibrations below this theoretical minimum, while still providing adequate resistance to extreme suspension displacement.

BRIEF DESCRIPTION OF THE INVENTION

The present invention relates to a system for using the endless track on a tracked vehicle as a spring to supplement the biasing force of the suspension system during certain types of loads. The resulting increase in track tension resists further increases in perimeter length, hence resisting further suspension displacement. Consequently, the spring and shock absorber calibrations can be reduced to levels not previously possible.

The suspension system for suspending an endless track beneath a tracked vehicle chassis can be a fully coupled suspension, a partially coupled suspension or a non-coupled suspension. The suspension system includes at least one elongated suspension rail having a front portion, a rear portion and a bottom track-engaging portion. At least one suspension arm has an upper end adapted for pivotal connection to the vehicle chassis and a lower end pivotally connected to the suspension rail. The upper or lower ends of the suspension arm can optionally have a displacement with a non-linear component. A biasing mechanism provides a biasing force to bias the suspension rail away from the vehicle chassis. The track tensioning system coupled to the suspension arm applies a tensioning force to the endless track in response to linear and/or rotational displacement of the suspension arm. The tensioning force generates a supplemental force transmitted by the endless track that augments the biasing force of the biasing mechanism. In a suspension system with front and rear suspension arms, the track tensioning system can be coupled to the front or rear suspension arms.

A variety of other mechanism and/or conditions can be used to cause the track tensioning system to increase track tension. In one embodiment, the track tensioning system is coupled to a coupling system. The track tensioning system applies a tensioning force to the endless track when the coupling system is activated. In another embodiment, the track tensioning system applies a tensioning force to the endless track in response to a displacement of the rear portion of the suspension rail greater than a displacement of a front portion of the suspension rail. The track tensioning system can also be triggered when the suspension rail experiences a G-bump or a tail bump. In yet another embodiment, the track tensioning system increases perimeter length of the suspension system in response to displacement of the suspension arm. The increase in perimeter length generates a supplemental force transmitted by the endless track that augments the biasing force of the biasing mechanism.

The displacement of the suspension arm can include linear and/or rotational components that causes the tensioning system to increase track tension. The supplemental force generated by the tensioning system can be proportional or non-proportional to the magnitude of the displacement of the suspension arm.

Various track tensioning mechanisms can be used in connection with the present suspension system. In one embodiment, the track tensioning system comprises a tensioning wheel engaged with an inside surface of the endless track. A bracket pivotally coupled to the suspension system supports the tensioning wheel at a first end and is coupled to one of the suspension arms at a second end.

In another embodiment, the track tensioning system includes a rear wheel pivotally mounted to the rear portion of the suspension rail and a connector arm coupled to the rear suspension arm at a first end and to the rear wheel at a second end. The connector arm can be coupled to the axle of the rear wheel, the bracket supporting the rear wheel or a variety of other locations.

In yet another embodiment, the rear wheel at the rear of the suspension rail is on an axle. The axle slidingly engaged with a slot on the rear portion of the suspension rail. The connector arm couples the rear suspension arm the axle. The slot can be horizontal, a combination of horizontal and non-horizontal components, curvilinear, or a combination thereof. The shape of the slot can vary the incremental increase in track tension as a function of rear wheel displacement.

In another embodiment, the rear wheel slidingly engages with a sliding member on the rear portion of the suspension rail. A connector arm is coupled to the suspension arm at a first end and the sliding member at a second end. The sliding member can include a static track tensioning assembly. The connector arm can include an elastic portion.

In another embodiment, a pivot connects the front portion of the suspension rail to the rear portion. A connector arm is coupled to the suspension arm at a first end and the front portion of the suspension rail at a second end. In one embodiment, the connector arm is coupled to a front suspension arm.

The track tensioning system can be coupled to the suspension arm using an elastic member. The elastic member can be an elastomeric material, a spring, a shock absorber or a variety of other structures. In one embodiment, the supplemental force comprises a compressive force that resists an increase in perimeter length of the suspension system during suspension displacement. In another embodiment, the tensioning system decreases the tensioning force on the track in response to a decrease in perimeter length during suspension displacement.

The suspension system can optionally include a coupling system that couples the rear suspension arm to the suspension rail. The suspension system can be a fully coupled, a partially coupled or a non-coupled suspension system.

BRIEF DESCRIPTION OF THE SEVERAL VIEWS OF THE DRAWING

Other advantages of the present invention will be readily appreciated, as the same becomes better understood by reference to the following detailed description when considered in connection with the accompanying drawings wherein:

FIG. **1** is a side view of a displacement force applied near the front portion of a suspension system.

FIG. **2** is a side view of a suspension system in a horizontally compressed configuration.

FIG. **3** is a side view of a displacement force applied near the rear portion of a suspension system.

FIG. **4** is a side view of a displacement force caused by an acceleration force applied to a suspension system.

FIG. **5** is a side view of a suspension system in accordance to the present invention in a neutral configuration.

FIG. **6** is an enlarged view of the track tensioning system of FIG. **5**.

FIG. **7** is side view of the suspension system of FIG. **5** with a displacement force applied near the rear portion.

FIG. **8** is side view of the suspension system of FIG. **6** with a greater displacement force applied near the rear portion.

FIG. **9** is side view of the suspension system of FIG. **5** in a horizontally compressed configuration.

FIG. **10** is a side view of an alternate suspension system in accordance to the present invention in a neutral configuration.

FIG. **11** is an enlarged view of the track tensioning system of FIG. **10**.

FIG. **12** is an enlarged view of a track tensioning system with a slot in a suspension rail that retains an axle of a rear wheel in accordance with the present invention.

FIG. **13** is an enlarged view of a track tensioning system with a sliding member in accordance with the present invention.

FIG. **14** is an enlarged view of a track tensioning system with an elastic connecting arm in accordance with the present invention.

FIG. **15** is an enlarged view of a track tensioning system with a pivoting front portion of the suspension rail in accordance with the present invention.

FIG. **16** is a side view of a snowmobile assembly equipped with a suspension system according to the present invention.

DETAILED DESCRIPTION OF THE INVENTION

In prior suspension systems, whether fully coupled, partially coupled, or non-coupled, reducing the variation in track tension during suspension travel was considered a fundamental objective of the design and considered necessary for good comfort and control of the suspension system. Changes in track tension can be caused by the irregular motions and configurations of the suspension system as it is displaced by bumps and acceleration forces. When the track stretches or loosens during suspension displacement (i.e., displacement of the suspension rails) a significant additional biasing force is added to or subtracted from the total biasing force of the suspension system.

While extreme tension on the track is undesirable, the present invention recognizes that lower levels of track tension can be induced to supplement the biasing force of the suspension system during certain types of suspension displacements. Consequently, the spring and shock absorber calibrations can be reduced to levels not previously possible. Conversely, the present tensioning system can be used to reduce track tension in those situations when excessive tensioning may occur.

In order to better understand the present system for using track tension to supplement the biasing force of a suspension system, a description of the various types of displacement forces applied to various types of suspension systems is required. The exemplary suspension systems of FIGS. **1–4** are used to illustrate suspension displacement. As used herein, "suspension displacement" refers to a change in a gap between the suspension rail(s) and the chassis of the vehicle. Other types of suspensions may behave differently under similar displacement conditions.

FIGS. **1** through **4** are schematic illustrations of various suspension systems **20** for an endless track in a forward mounted drive system. For the sake of simplicity, the same numbering scheme is used in FIGS. **1–4**.

The endless track **22** travels around the circumference of the drive sprocket **24** in a direction **26** opposite the direction **28** of vehicle travel. The endless track **22** then travels at a rearward and downward angle away from the drive sprocket **24**. The track **22** then generally comes in contact with the front portion **30** of suspension rail **32** (or a wheel mounted to the front portion of the suspension rail). The track **22** continues rearward until it comes in contact with the ground **34** and subsequently rear wheel **36**. The rear wheel **36** changes the direction of the track **22** to an upward and forward direction. The track **22** then comes in contact with a carrier guide mechanism **38**, usually a wheel that carries the track **22** above the rest of the suspension system **20** on route back to the drive sprocket **24**.

FIG. **1** illustrates a non-coupled system. When the front portion **30** of the suspension rail **32** is subject to a displacement force **31**, it is displaced independently of rear portion **42**. When the rear suspension arm **39** is displaced, it rotates relative to the suspension rail **32**. The displacement of the rear suspension arm **39** typically has a non-rotational or linear component. As used herein, the term "linear component" refers to displacement that is at least in part linear, but does not preclude rotational components. In an alternate embodiment, displacement of the front suspension arm **37** may also have a linear component.

In the illustrated embodiment, the displacement force is caused by a collision with bump **40** during displacement of the tracked vehicle in the direction **28**. As used herein, "displacement force" refers to a force that causes displacement of a suspension rail relative to a vehicle chassis.

The geometry of the suspension system **20** comprises a perimeter having a perimeter length **21** around which the track **22** rotates. In the configuration of FIG. **1**, suspension displacement increases the perimeter length **21** and the track tension as represented schematically by the extension of coil spring **44** and an increase in the separation between points A and B. As used herein, "perimeter length" refers to a distance traversed by an endless belt on a suspension system for a tracked vehicle. Perimeter length and track tension are directly related. An increase in perimeter length increases track tension and a decrease in perimeter length decreases track tension.

FIG. **2** illustrates either a fully coupled or a partially coupled suspension system **20** collapsed in a generally horizontal configuration by force **33**. In a fully coupled suspension, the coupling system **46** is fixed and permits no displacement (or minimal displacement) having a linear component of the rear suspension arm **39** relative to the suspension rail **32**. In a partially coupled suspension, the coupling system **46** permits some independent movement of the rear suspension arm **39** relative to the suspension rail **32** until slide block **50** encounters the top or bottom of slot **52**. Where the perimeter length **21** increases, the track tension increases as represented schematically by the extension of coil spring **44** and an increase in the separation between points A and B.

In a partially coupled suspension, coupling system **46** is activated, as illustrated by the position of slide block **50** at the top of slot **52**. Once the slide block **50** has reached the limits of travel, the suspension system **20** operates similar to a fully coupled suspension. A coupling system is "activated" when the linear component of rear suspension arm displacement relative to a suspension rail reaches a mechanical limit. Subsequent displacement of the rear suspension arm is analogous to a fully coupled suspension.

FIGS. **3** and **4** each illustrate either a non-coupled suspension or a partially coupled suspension system prior to activation. The suspension systems of FIGS. **3** and **4** are shown being subjected to a displacement force near the rear portion **42** of the suspension rail **32**. In the non-coupled configuration, the slide block **50** never reaches the top or the bottom of the slot **52** during normal suspension displacement. Consequently, displacement of the rear suspension arm **39** relative to the suspension rail **32** has a linear component through the entire range of suspension displacement. A rotational displacement component may also be present. In a partially coupled suspension, the slide block **50** has not yet reached the top or bottom of the slot **52** so that the suspension system temporarily operates as a non-coupled suspension.

FIG. **3** illustrates the rear portion **42** of the suspension **20** displaced by bump **40** independent of the front portion **30**. The rear portion **42** is displaced from the neutral configuration toward the chassis **58**. The front portion **30** is either not displaced or is displaced less than the rear portion **42**.

The configuration of FIG. **3** is referred to as a tail-bump.

FIG. **4** illustrates the rear of the suspension **20** compressed by a sudden acceleration force or by terrain configurations commonly described in the trade as a G-bumps. These bumps can be found traversing the U-shaped bottoms of ditches or gullies, or can sometimes occur when a bump on a trail has a generally rounded edge on either entry or exit or both. As used herein, "G-bump" refers to a high gravitational force applied to the suspension system and a low velocity displacement of the suspension system. The conditions corresponding to a G-bump can also be caused by sudden acceleration of the tracked vehicle. Such accelerations fall within the definition of a G-bump.

In both of these configurations, the perimeter length **21** and track tension are typically reduced. The reduction in track tension is illustrated schematically by the reduction in the distance between the points A and B. The reduction in track tension illustrated in FIGS. **3** and **4** can have a detrimental effect on two functions of the suspension **20**. First, the decrease in tension reduces the grip of the drive sprocket **24** on the track **22**, such that the track **22** can jump the sprocket **24**. Secondly, the reduction in track tension in an uncoupled suspension system can require one of the biasing mechanisms **54**, **56** to carry the entire load imparted by the force. Consequently, the springs **60** and shocks **62** are typically calibrated firmer or stiffer then nominal to resist bottoming of the suspension **20**. As used herein, "bottoming" refers to a portion of a suspension system contacting an inside surface of the chassis, a suspension arm contacting against a suspension rail, or a shock absorber at a minimum compressive length. The additional biasing force required by the biasing mechanisms **54**, **56** results in the suspension system **20** being firmer in calibration then would normally be required for all other riding condition, resulting in a less comfortable ride.

Compounding these problems is the fact that the biasing contribution of a shock absorbers **62** is reduced as the speed of the shock displacement is reduced. The reduced velocity displacement of the suspension system **20** in some condition reduces the shock speed to the point that a significant portion of the biasing force of the shocks **62** can be lost. This loss of shock biasing when combined with the loss of tension force from the track can cause the suspension **20** to bottom in the chassis **58**, which delivers a discomfort to the rider and sometimes less control of the vehicle. Even without any loss of track tension, the loss of shock bias during reduced velocity displacement typically necessitates a supplemental biasing force. In prior suspension systems, this supplemental biasing force was provided by using stiffer springs.

The present invention provides a track tensioning system that counteracts or off-sets reductions in perimeter length and the corresponding loss of track tension. The increased track tension generates a supplemental force that augments the biasing force of the biasing mechanisms **54**, **56**. The supplemental force is transmitted by the endless track **22** and restrains further displacement of the suspension system **20**. The supplemental force is particularly useful to compensate for the biasing force lost when the shocks **62** are compressed slowly by a G-bump or because a tail-bump is resisted primarily by the rear biasing mechanism **56**, regardless of the rate of shock compression. The advantage to this arrangement is that the biasing force provided by the biasing mechanisms can be reduced to provide an overall softer ride, while the supplemental force provides sufficient force for the biasing mechanism to handle G-bump and tail-bump conditions.

If a particular suspension displacement (e.g., G-bump, tail-bump, etc.) causes the perimeter length **21** to decrease, the track tensioning system counteracts or off-sets that decrease in perimeter length **21** so that the suspension displacement results in a net increase in perimeter length **21**. The net increase in perimeter length **21** resulting from the combined actions of the suspension displacement and the tensioning system is resisted by the endless belt **22**, thereby augmenting the biasing mechanisms **54**, **56**. The net increase in perimeter length often results from the tensioning system increasing perimeter length more than the suspension displacement reduces perimeter length. The present tensioning system can also be used to prevent excessive track tensioning. That is, the tensioning system reduces perimeter length to counteract the increase in perimeter length caused by suspension displacement.

FIG. **5** is a side view of a suspension system **100** in accordance with the present invention in the neutral configuration. As used herein, "neutral configuration" refers to a suspension system at rest with the various components in a steady state. Endless track **102** travels around the circumference of drive sprocket **104** in a direction **106** opposite of direction **108** of vehicle travel. The endless track travels rearwardly from the drive sprocket **104** to at least one suspension rail **110** that is suspended from chassis **112** by front suspension arm **114** and rear suspension arm **116**. The endless track **102** continues along the suspension rail **110** until it contacts rear wheel **118**. The rear wheel **118** changes direction of the endless track **102** to an upward and forward direction where it is supported by tensioning wheel **120** and carrier wheel **122**. The endless track **102** continues along its path until it routed back the drive wheel **104**.

In the neutral configuration illustrated in FIG. **5**, the suspension system **100** comprises a perimeter with a perimeter length **103**. The perimeter length is illustrated as the length of the endless belt **102**. Depending upon the type of suspension system (fully coupled, partially coupled or non-coupled) and the nature of the displacement force, the perimeter length **103** may increase, decrease or remain unchanged during suspension displacement.

Biasing mechanisms **124**, **126** bias the suspension rail **110** away from the chassis **112**. A typical biasing mechanism is a coil spring surrounding a shock absorber. Although FIGS. **5–9** illustrate two biasing mechanisms **124**, **126**, the present invention is equally applicable to suspension systems with a single biasing mechanism or several biasing mechanisms. Biasing mechanisms other than a coil spring surrounding the shock absorber are within the scope of the present invention.

The suspension system **100** can be fully coupled, partially coupled or non-coupled. In an embodiment where the suspension system is partially coupled, optional coupling system **130** is provided. Suitable coupling systems are disclosed in the Karpik Patents, U.S. Pat. No. 6,206,124 (Mallette), U.S. Pat. No. 5,692,579 (Peppel et al.); and U.S. Pat. No. 5,944,134 (Peppel et al.). A commercially available suspension having a suitable coupling system is available from Formula Fast Racing of Eveleth, Minnesota under the product designation "M-10". A variety of coupling systems can be used in the suspension system **100** and the present invention is not limited to those disclosed herein. For example, a coupling system can be used to couple the top of one or both of the suspension arms to the chassis.

In the illustrated embodiment, tensioning system **140** is coupled to the rear suspension arm **116** to selectively apply tension to the endless track **102**. As best illustrated in FIG. **6**, the tensioning system **140** includes an arm **142** attached to the rear suspension arm **116**. Connector arm **144** is pivotable attached to the arm **142** at pivot point **146**. The

other end of connector arm **144** is pivotably attached to bracket **148** that supports tensioning wheel **120**. FIG. **6** illustrates multiple possible pivot points **149** for attaching the second end of the connector arm **144** to the bracket **148**. The various pivot points **149** are used to tune the suspension system **100**. Alternatively, the tensioning system **140** can be coupled to the front suspension arm **114** (see e.g., FIG. **15**).

As the rear suspension arm **116** is displaced, the arm **142** causes the connector arm **144** to rotate bracket **148** around pivot point **152** in a direction **154**. The displacement of the rear suspension arm **116** can include a linear component **150**, a rotational component **151**, or a combination thereof. Displacement of the bracket **148** rotates the tensioning wheel **120** along an arc **156** that applies tension force **158** on the endless track **102** and increases the perimeter length **103** of the suspension system **100**. As used herein, "tensioning system" refers to a system that increases or decreases track tension and perimeter length on a suspension system. In some embodiments, suspension displacement can result in a decrease in perimeter length that is counteracted by the tensioning system, so that there is no net increase in perimeter length or track tension. Typically, however, the tensioning system provides a net increase in perimeter length in excess of any decrease in perimeter length caused by suspension displacement.

In those embodiment where suspension displacement results in a decrease in the perimeter length **103**, the track tensioning system **140** counteracts that decrease in perimeter length **103** so that there is a net increase in perimeter length **103** during suspension displacement. The result is that perimeter length **103** increases during suspension displacement. By increasing the perimeter length **103** during suspension displacement, the corresponding increase in track tension creates a supplemental force **125** that resists further suspension displacement and augments the biasing forces generated by the biasing mechanisms **124**, **126**. For the sake of clarity, the supplemental force **125** is illustrated schematically as creating a downward bias on the suspension rail **110**. In practice, however, the supplemental force **125** is an inwardly compressive force transmitted by the track **102** to the various components of the suspension system **100** supporting the track **102** that resists further increases in perimeter length **103**. That is, the supplemental force **125** is not localized, but rather resists further increases in the perimeter length **103**, and thereby resists displacement of the various components throughout the suspension system **100**.

In an embodiment where the rear suspension arm **116** is coupled to the suspension rail **110** by coupling system **130**, the linear component **150** of rear suspension arm **116** displacement generally causes the track tensioning system **140** to increase track tension and the perimeter length **103**, although the rotational component **151** may also contribute. That is, activation of the coupling system **130** causes an increase in perimeter length **103** that is resisted by the track **102**.

In an embodiment of a suspension system without the coupling system **130**, the track tensioning system **140** can increase track tension and perimeter length **103** when displacement of the rear portion **132** of the suspension rail **110** toward the chassis **112** is greater than the displacement of the front portion **134**. That is, the track tensioning system **140** increases track tension and perimeter length **103** when the suspension rail **140** is tipped up in the rear relative to the chassis **112** (see FIGS. **7** and **8**). The track tensioning system **140** can alternately increase track tension when the front suspension arm **114** is displaced.

A variety of other mechanism and/or conditions can be used to cause the track tensioning system **140** to increase track tension and perimeter length **103**. In one embodiment, the track tensioning system **140** applies a tensioning force to the endless track **102** and an increase in perimeter length **103** in response to a displacement of the rear portion **132** of the suspension rail **110** greater than a displacement of a front portion **134** of the suspension rail. The track tensioning system **140** can also be triggered when the suspension rail experiences a G-bump or a tail bump (see FIG. **7**).

FIG. **7** illustrates the suspension **100** with the rear wheel **118** displaced towards the chassis **112** by either a bump **160** or acceleration of the tracked vehicle. The front portion **134** is not displaced or is displaced less than the displacement of the rear portion **132** of the suspension rail **110**. The differential of displacement between the rear portion **132** and the front portion **134** causes the rear suspension arm **116** to be displaced generally in the direction **150**, as discussed above. The resulting movement of the tensioning wheel **120** can increases the tension on the endless track **102** above the level of neutral tension. In an embodiment where further displacement of the rear portion **132** towards the chassis **112** increases perimeter length **103**, the endless track **102** resists that suspension displacement.

FIG. **8** illustrates the suspension system **100** with the rear portion **132** displaced an even greater amount than illustrated in FIG. **7**. The additional displacement of the rear portion **132** towards the chassis **112** causes further displacement of the rear suspension arm **116** generally in the direction **150**. The tensioning wheel **120** is advanced further along the arc **156** and the tensioning force **158** is increased. Consequently, the supplemental force **125** provided by track tension increases to further augment the biasing force of the biasing mechanisms **124**, **126**.

In the illustrated embodiment, the amount of tension on the endless track **102** and the perimeter length **103** increases with displacement of the rear portion **132** relative to the chassis **112**. In the embodiment of FIG. **8**, the carrier wheel **122** is now separated from the endless track **102** by a gap **162**. The tensioning wheel **120** becomes the primary support of the endless track **102** in the region above the suspension **100**.

The increase or decrease in perimeter length due to suspension displacement may not be linear. In some suspension systems, each incremental amount of suspension displacement may or may not result in a corresponding increase/decrease in perimeter length. The present tensioning system **140** can be tuned to compensate for irregular changes in perimeter length throughout the fully range of suspension displacement. Whether the tensioning system **140** increases or decreases perimeter length at various stages of suspension displacement is of course a function of the suspension geometry.

FIG. **9** is a side sectional view of the suspension **100** in a horizontally compressed configuration. This geometry typically results in an increase track tension and perimeter length. Consequently, the tensioning wheel **120** is folded down towards the suspension rail **110** so as to not over-tension the track **102**. In an alternate embodiment where the track tension is reduced in the horizontally compressed configuration of FIG. **9**, the track tensioning system **140** can be calibrated to increase track tension.

In any embodiment where track tension is increased during suspension displacement, the present tensioning system **140** can be used to reduce track tension and perimeter length. The ability of the present invention to prevent excessive track tension applies to fully coupled, non-coupled and partially coupled suspension systems.

In the embodiments of FIGS. **5** through **9**, the amount of tension applied to the endless track **102** varies with the configuration of the suspension system **100**. In the configuration of FIG. **7**, the rear wheel **118** is displaced about 50 millimeters. The additional tension applied to the track **102** by the tensioning wheel **120** increases the overall length of the track **102** by about 0.2 inches. Viewed from another perspective, the tensioning system **140** provides a net increase in perimeter length **103** of the suspension system **100** of about 0.2 inches.

As additional displacement of the rear portion **132** of the suspension rail **110** is encountered, the tensioning wheel **120** increases the tension on the track **102**. In the configuration of FIG. **8**, the rear wheel **118** has been displaced about 200 millimeters. The endless track **102** has been increased in length by about 1 inch. Alternatively, the tensioning system **140** can be viewed as causing a net increase in the perimeter length **103** of the suspension system **100** of about 1 inch.

Finally, by folding the tension wheel **120** down towards the suspension rail **110**, the amount of tension on the track **102** is reduced from the level provided in the configuration of FIG. **8**. In the illustrated embodiment, the endless track **102** has been increased in length by about 0.4 inches in the configuration of FIG. **9** (or the perimeter length **103** has realized a net increase of about 0.4 inches).

The amount of tension generated by the tensioning system **140** in the present suspension system **100** is sufficiently small that there is no substantial risk of damage to the track **102**. Additionally, the quality of tracks has improved significantly over the last decade so that they are better able to handle the levels of tension applied by the track tensioning system.

An additional benefit from the track tensioning system **140** is an ability to increase the overall vertical displacements of the suspension system **100**, while still being able to maintain the desired tensions in the track **102**. Without the track tensioning system **140**, large displacement suspension would not be possible, as the track **102** would become to loose and or to tight at the extreme front or rear displacements. The present tensioning system **140** is particularly effective in tensioning suspension systems with a displacement of about ten inches or more.

FIGS **10** and **11** illustrate and alternate suspension system **200** in accordance with the present invention. The suspension system **200** can be fully coupled, partially coupled or non-coupled. As discussed above, endless track **202** is driven by drive wheel **204** along a suspension rail **206** around a rear wheel **208**. Carrier wheel **210** delivers the endless track **202** back to the drive wheel **204**.

In the embodiments of FIGS. **10** and **11**, the rear wheel **208** is pivotably mounted to the suspension rail **206** by member **212**. The member **212** is attached to the suspension rail **206** at pivot point **224**. Connector arm **214** is mechanically coupled at a first end to the front or rear suspension arms **226**, **218** or to optional coupling system **216**. Second end of connector arm **214** can be coupled to axle **209** of the rear wheel **208**, the rear wheel **208** or the member **212**. As the rear suspension arm **218** is displaced generally in the direction **220** and/or the direction **221**, the connector arm **214** displaces the rear wheel **208** generally in a direction **222**, thereby increasing tension on the track **202** and perimeter length **203** of the suspension system **200**. The connector arm **214** is preferably adjustable in length so as to permit tuning of the track tension.

FIG. **12** is a schematic illustration of a suspension system **250** with an alternate track tensioning system **252**. The suspension system **250** can be fully coupled, partially coupled or non-coupled. Axle **259** for the rear wheel **256** resides in a slot **258** in suspension rail **270**. Connecting arm **260** couples the axle **259** to rear suspension arm **262**. When the rear suspension arm **262** is displace and/or the optional coupling system **264** is activated, rear suspension arm **262** is moved generally in the direction **266**. Displacement of the rear suspension arm **262** may also include a rotational component. The displacement of the rear suspension arm **262** is transmitted to the rear wheel **256** by the connecting arm **260**, thereby increasing the tension on the track **268** and the perimeter length **269** of the suspension system **250**.

The slot **258** is illustrated as having a generally horizontal portion **272** and an non-horizontal portion **274**. In the illustrated embodiment, the non-horizontal portion **274** has a slight upward curve. Alternatively, the non-horizontal portion can be a linear portion angled upward or downward relative to horizontal. As the axle **259** traverses the horizontal portion **272** generally in the direction **271**, the incremental increase in track tension and perimeter length **269** is generally constant. As the axle **259** traverses the curved portion **274**, however, the additional increase in track tension and perimeter length can be different than a corresponding amount of track tension and perimeter length increase caused by displacement of axle **259** along the horizontal portion **272**. By changing the shape of the slot **258**, amount of track tension and perimeter length can increase or decrease with the displacement of the rear wheel **256**. For example, if displacement of the rear wheel **256** by the rear suspension arm **262** is divided into three equal increments, the increment increase in track tension can be varied along each increment depending upon the shape of the slot **258**.

FIG. **13** is a schematic illustration of a suspension system **400** with an alternate track tensioning system **402**. The suspension system **400** can be fully coupled, partially coupled or non-coupled. Axle **404** for the rear wheel **406** resides in a slot **408** in sliding member **410**. Alternate slot configurations such as discussed in connection with FIG. **12** can be used on the sliding member **410**. Connecting arm **412** couples the sliding member **410** to rear suspension arm **414**. Sliding member **410** includes static track tensioning assembly **422**. In the illustrated embodiment, the static track tensioning assembly **422** includes a threaded member **424** that contact with the axle **404**. The threaded member **424** can be positioned in the sliding member **410** to increase or decrease static tension of track **418**. Track adjustment is typically done while the suspension system **400** is in the neutral configuration. A variety of other static track tensioning assemblies can be used with the present track tensioning system **402**.

When the rear suspension arm **414** is displaced, rear suspension arm **414** is moved generally in the directions **416** and/or **417**. The displacement of the rear suspension arm **414** displaces the sliding member **410** (and the static track tensioning assembly **422**), thereby increasing the tension on the track **418** and the perimeter length **420** of the suspension system **400**.

FIG. **14** is a schematic illustration of a suspension system **450** with an alternate track tensioning system **452**. The suspension system **450** can be fully coupled, partially coupled or non-coupled. Axle **456** for the rear wheel **454** resides in a slot **458** in sliding member **460** as discussed in connection with FIG. **13**. Connecting arm **462** still couples the sliding member **460** to rear suspension arm **464**, except that the connector arm **462** includes an elastic member **466** that compresses during the initial displacement of the rear suspension arm **464**. Consequently, the initial displacement

of the rear suspension arm **464** results in little or no displacement of the sliding member **460**. Once the elastic member **466** is substantially compressed, the sliding member **460** will be displace in the direction **468**, resulting in an increase in tension on track **470** and an increase in perimeter length **472**. The elastic member **466** can be a spring, shock absorber, elastomeric material, or a variety of other members. The Durometer value of an elastic member **466** constructed from an elastomeric material can be engineered so that any increase in track tension and perimeter length is delayed until the rear suspension arm **464** is displaced a predetermined amount. In another embodiment, the elastic member **466** compresses during most or all of the displacement of the sliding member **460**. Any of the connector arms disclosed herein can include an elastic portion, such as discussed above.

FIG. **15** is a schematic illustration of an alternate suspension system **500** in which tensioning system **502** is coupled to front suspension arm **504**. Front portion **506** of suspension rail **508** is pivotally attached to rear portion **510** at pivot **512**. The pivot **512** permits the front portion **506** to move along arc **514**. Connector arm **516** couples the front suspension arm **504** to the front portion **506**. Displacement of the front suspension arm **504** causes the front portion **506** to move along arc **514**, thereby increasing or decreasing tension on track **518** and perimeter length **520**.

Displacement of front suspension arm **504** can be rotational around pivot **522** or may include a linear component **524**. In one embodiment, the front suspension arm **504** is connected to the suspension rail **508** using one of the coupling systems discussed herein. In the illustrated embodiment, rotation of the front suspension arm **504** in direction **526** causes front portion **506** to move in direction **528**. The resulting increase in perimeter length **520** is resisted by the endless track **518**.

The present suspension system is not limited to the track tensioning system disclosed herein. In yet another embodiment, it is possible to displace the entire suspension rail at various mounting points at the chassis and/or the suspension rail to increase the tension on the track. In another embodiment, it is possible to displace the drive axle for the drive wheel to increase track tension. Various other track tensioning schemes are contemplated by the present invention. The present suspension system is also not limited to those having two suspension arms. Suspension systems with one or more suspension arms can be used with the present tensioning system.

FIG. **16** illustrates a snowmobile **310** using a suspension system **316** with a track tensioning system in accordance with the present invention. The snowmobile **310** includes a body frame or chassis **312** that mounts a seat **314** on the upper side thereof. When seated on the snowmobile seat **314**, a driver manually steers the vehicle **310** by a handlebar assembly **318** that is secured to a steering shaft **320** which extends through a compartment **322** for the internal combustion engine **324** and inside belly pan **326**. The steering shaft **320** is coupled to a pair of steerable skis **328** through suitable steering linkage, preferably arranged so that the inside cornering ski **328** turns at a greater angle than the outside ski **328** of the turn to provide comfortable steering. Also, a forward angling of the ski support legs causes the steering skis **328** to bank into turns for improved maneuverability and handling. The belly pan **326** curves rearwardly to the forward end of the endless track assembly **316** driven by drive wheel **340** of the vehicle **310**. The full weight of the driver and a major percentage of the vehicle weight rides directly over the track assembly **316** for improved traction.

Although the present invention has been described with reference to preferred embodiments, workers skilled in the art will recognize that changes may be made in form and detail without departing from the spirit and scope of the invention. In addition, the invention is not to be taken as limited to all of the details thereof as modifications and variations thereof may be made without departing from the spirit or scope of the invention.

What is claimed is:

1. A suspension system for suspending an endless track beneath a tracked vehicle chassis, the suspension system comprising:

at least one elongated suspension rail having a front portion, a rear portion and a bottom track engaging portion;

at least one suspension arm having an upper end adapted for pivotal connection to the vehicle chassis and a lower end pivotally connected to the suspension rail;

a biasing mechanism adapted to provide a biasing force that biases the suspension rail away from the vehicle chassis; and

a track tensioning system coupled to the suspension arm that applies a tensioning force to the endless track in response to displacement of the suspension arm, the tensioning force generating a supplemental force transmitted by the endless track that augments the biasing force of the biasing mechanism.

2. The suspension system of claim **1** wherein the displacement of the suspension arm comprises a linear component.

3. The suspension system of claim **1** wherein the supplemental force is proportional to a magnitude of the displacement of the suspension arm.

4. The suspension system of claim **1** wherein the supplemental force is not proportional to a magnitude of the displacement of the suspension arm.

5. The suspension system of claim **1** wherein the track tensioning system comprises:

a tensioning wheel engaged with an inside surface of the endless track; and

a bracket pivotally coupled to the suspension system supporting the tensioning wheel at a first end and coupled to the suspension arm at a second end.

6. The suspension system of claim **1** wherein the track tensioning system comprises:

a rear wheel pivotally mounted to the rear portion of the suspension rail; and

a connector arm coupled to the suspension arm at a first end and to the rear wheel at a second end.

7. The suspension system of claim **1** wherein the track tensioning system comprises:

a rear wheel slidingly engaged with the rear portion of the suspension rail; and

a connector arm coupled to the suspension arm at a first end and the rear wheel at a second end.

8. The suspension system of claim **1** wherein the track tensioning system comprises:

a rear wheel on an axle, the axle slidingly engaged with a slot on the rear portion of the suspension rail; and

a connector arm coupled to the suspension arm at a first end and the axle at a second end.

9. The suspension system of claim **8** wherein the slot comprises a horizontal portion.

10. The suspension system of claim **8** wherein the slot comprises a horizontal portion and a non-horizontal portion.

11. The suspension system of claim **1** wherein the track tensioning system comprises:

a rear wheel slidingly engaged with a sliding member on the rear portion of the suspension rail; and

a connector arm coupled to the suspension arm at a first end and the sliding member at a second end.

12. The suspension system of claim **11** wherein the sliding member includes a static track tensioning assembly.

13. The suspension system of claim **11** wherein the connector arm comprises an elastic portion.

14. The suspension system of claim **1** wherein the track tensioning system comprises:

a pivot connecting the front portion of the suspension rail to the rear portion; and

a connector arm coupled to the suspension arm at a first end and the front portion of the suspension rail at a second end.

15. The suspension system of claim **14** wherein the connector arm is coupled to a front suspension arm.

16. The suspension system of claim **1** wherein the track tensioning system is coupled to the suspension arm using an elastic member.

17. The suspension system of claim **1** comprising a coupling system permitting a displacement of the suspension arm that includes a non-linear component.

18. The suspension system of claim **1** wherein the suspension arm and the suspension rail comprise a fully coupled suspension system.

19. The suspension system of claim **1** wherein the suspension arm and the suspension rail comprise a non-coupled suspension system.

20. The suspension system of claim **1** wherein the suspension arm and the suspension rail comprise a partially coupled suspension system.

21. The suspension system of claim **1** wherein the suspension arm comprises a front suspension arm and a rear suspension arm, the track tensioning system being coupled to the rear suspension arm.

22. The suspension system of claim **1** wherein the suspension arm comprises a front suspension arm and a rear suspension arm, the track tensioning system being coupled to the front suspension arm.

23. The suspension system of claim **1** wherein the supplemental force comprises a compressive force on the suspension system.

24. The suspension system of claim **1** wherein the supplemental force comprises a compressive force that resists an increase in perimeter length of the suspension system during suspension displacement.

25. The suspension system of claim **1** wherein the tensioning system decreases the tensioning force on the track in response to a decrease in perimeter length during suspension displacement.

26. A suspension system for suspending an endless track beneath a tracked vehicle chassis, the suspension system comprising:

at least one elongated suspension rail having a front portion, a rear portion and a bottom track engaging portion;

at least one suspension arm having an upper end adapted for pivotal connection to the vehicle chassis and a lower end pivotally connected to the suspension rail;

a biasing mechanism adapted to provide a biasing force to bias the suspension rail away from the vehicle chassis;and

a track tensioning system that applies a tensioning force to the endless track in response to a displacement of the rear portion of the suspension rail greater than a displacement of a front portion of the suspension rail, the tensioning force generating a supplemental force that augments the biasing force of the biasing mechanism.

27. A suspension system for suspending an endless track beneath a tracked vehicle chassis, the suspension system comprising:

at least one elongated suspension rail having a front portion, a rear portion and a bottom track engaging portion;

a front suspension arm having an upper end adapted for pivotal connection to the vehicle chassis and a lower end pivotally connected to the suspension rail;

a rear suspension arm having an upper end for pivotal connection to the vehicle chassis and a lower end pivotally connected to the suspension rail;

a biasing mechanism adapted to provide a biasing force to bias the suspension rail away from the vehicle chassis; and

a track tensioning system coupled to one of the suspension arms that applies a tensioning force to the endless track in response to a G-bump on the suspension rail, the tensioning force generation a supplemental force that augments the biasing force of the biasing mechanism.

28. A suspension system for suspending an endless track beneath a tracked vehicle chassis, the suspension system comprising:

at least one elongated suspension rail having a front portion, a rear portion and a bottom track engaging portion;

a front suspension arm having an upper end adapted for pivotal connection to the vehicle chassis and a lower end pivotally connected to the suspension rail;

a rear suspension arm having an upper end for pivotal connection to the vehicle chassis and a lower end pivotally connected to the suspension rail;

a biasing mechanism adapted to provide a biasing force to bias the suspension rail away from the vehicle chassis; and

a track tensioning system coupled to one of the suspension arms that applies a tensioning force to the endless track in response to a G-bump on the suspension rail, the tensioning force generating a supplemental force that augments the biasing force of the biasing mechanism.

29. A suspension system for suspending an endless track beneath a tracked vehicle chassis, the suspension system comprising:

at least one elongated suspension rail having a front portion, a rear portion and a bottom track engaging portion;

a front suspension arm having an upper end adapted for pivotal connection to the vehicle chassis and a lower end pivotally connected to the suspension rail;

a rear suspension arm having an upper end for pivotal connection to the vehicle chassis and a lower end pivotally connected to the suspension rail;

a biasing mechanism adapted to provide a biasing force that biases the suspension rail away from the vehicle chassis; and

a track tensioning system coupled to one of the suspension arms that applies a tensioning force to the endless track in response to displacement of the suspension arm, the tensioning force generating a supplemental

force transmitted by the endless track that augments the biasing force of the biasing mechanism.

30. A suspension system for suspending an endless track beneath a tracked vehicle chassis, the suspension system comprising:

at least one elongated suspension rail having a front portion, a rear portion and a bottom track engaging portion;

at least one suspension arm having an upper end adapted for pivotal connection to the vehicle chassis and a lower end pivotally connected to the suspension rail;

a biasing mechanism adapted to provide a biasing force that biases the suspension rail away from the vehicle chassis; and

a track tensioning system coupled to the suspension arm that increases a perimeter length of the suspension system in response to displacement of the suspension arm, the increase in perimeter length generating a supplemental force transmitted by the endless track that augments the biasing force of the biasing mechanism.

* * * * *

UNITED STATES PATENT AND TRADEMARK OFFICE

CERTIFICATE OF CORRECTION

PATENT NO. : 6,715,575 B2
DATED : April 6, 2004
INVENTOR(S) : Gerard J. Karpik

It is certified that error appears in the above-identified patent and that said Letters Patent is hereby corrected as shown below:

Column 15,
Line 51, insert claim 26 as follows:
--

26. A suspension system for suspending an endless track beneath a tracked vehicle chassis, the suspension system comprising:

at least one elongated suspension rail having a front portion, a rear portion and a bottom track engaging portion;

a front suspension arm having an upper end adapted for pivotal connection to the vehicle chassis and a lower end pivotally connected to the suspension rail;

a rear suspension arm having an upper end for pivotal connection to the vehicle chassis and a lower end pivotally connected to the suspension rail;

a biasing mechanism adapted to provide a biasing force to bias the suspension rail away from the vehicle chassis;

a coupling system that couples the rear suspension arm to the suspension rail; and

a track tensioning system coupled to the coupling system that applies a tensioning force to the endless track when the coupling system is activated, the tensioning force generating a supplemental force that augments the biasing force of the biasing mechanism.

--.

Column 16,
Line 44, replace “G-bump” with -- tail-bump --.

Signed and Sealed this

Seventeenth Day of August, 2004

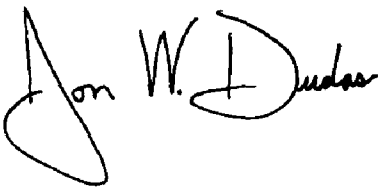

JON W. DUDAS
Acting Director of the United States Patent and Trademark Office