US007708096B2

(12) **United States Patent**
Vezina

(10) **Patent No.: US 7,708,096 B2**
(45) **Date of Patent: May 4, 2010**

(54) **SNOWMOBILE FOOTREST HAVING FOOT GRIPPING ELEMENTS**

(75) Inventor: **Sébastien Vezina**, Sherbrooke (CA)

(73) Assignee: **Bombardier Recreational Products Inc.**, Valcourt (CA)

(*) Notice: Subject to any disclaimer, the term of this patent is extended or adjusted under 35 U.S.C. 154(b) by 469 days.

(21) Appl. No.: **11/676,157**

(22) Filed: **Feb. 16, 2007**

(65) **Prior Publication Data**

US 2008/0196958 A1 Aug. 21, 2008

(51) **Int. Cl.**
B62D 25/22 (2006.01)

(52) **U.S. Cl.** **180/90.6**; 180/190; 280/164.2; 280/291

(58) **Field of Classification Search** 180/190, 180/89.1, 90.6; 280/291, 813, 163, 164.1, 280/164.2, 169; 74/564; 224/519, 521, 532, 224/537

See application file for complete search history.

(56) **References Cited**

U.S. PATENT DOCUMENTS

802,936	A *	10/1905	Marius	52/181
1,343,356	A *	6/1920	Doe	15/238
1,680,032	A *	8/1928	Anderson	428/596
2,843,870	A *	7/1958	Perry	15/237
6,604,594	B2	8/2003	Wubbolts et al.	
6,968,917	B2 *	11/2005	Rondeau et al.	180/89.1
2005/0121244	A1 *	6/2005	Mallette et al.	180/183
2005/0184482	A1 *	8/2005	Byrne	280/164.1
2009/0008170	A1 *	1/2009	Claussen	180/90.6

* cited by examiner

Primary Examiner—Lesley Morris
Assistant Examiner—Maurice Williams
(74) *Attorney, Agent, or Firm*—Osler, Hoskin & Harcourt LLP

(57) **ABSTRACT**

A snowmobile footrest has a top surface, a first foot gripping element extending upwardly and forwardly from the top surface, and a second foot gripping element extending upwardly and rearwardly from the top surface. A snowmobile frame and a snowmobile having the footrest are also disclosed.

12 Claims, 5 Drawing Sheets

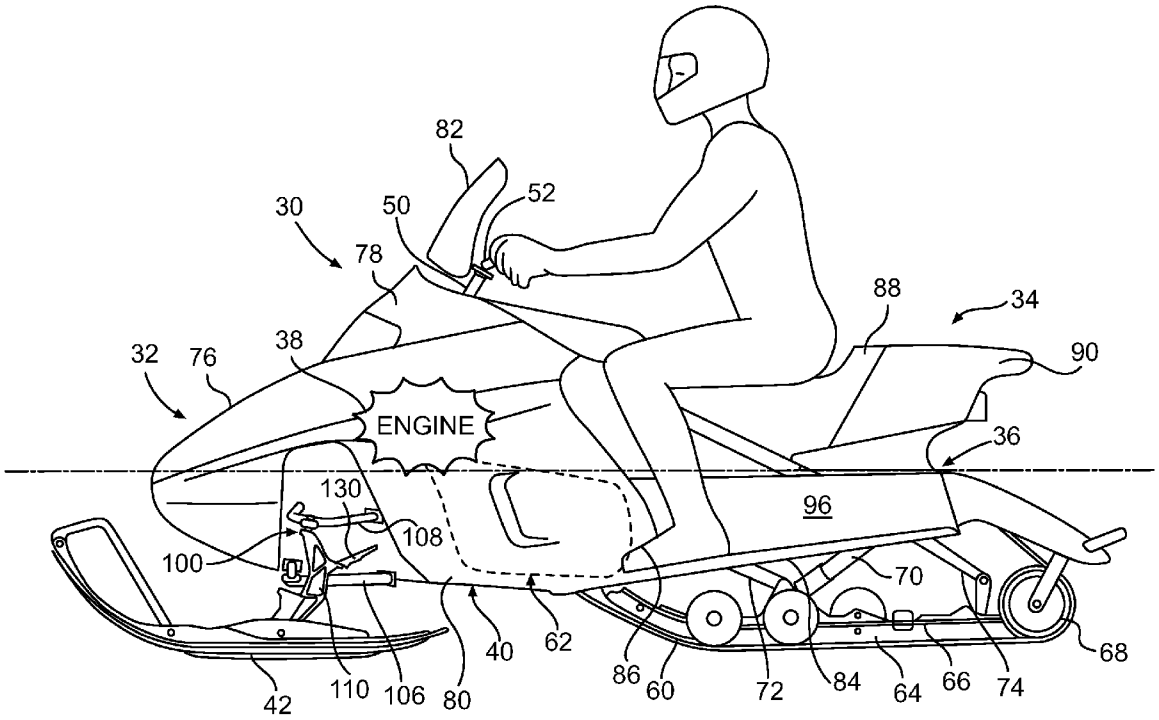

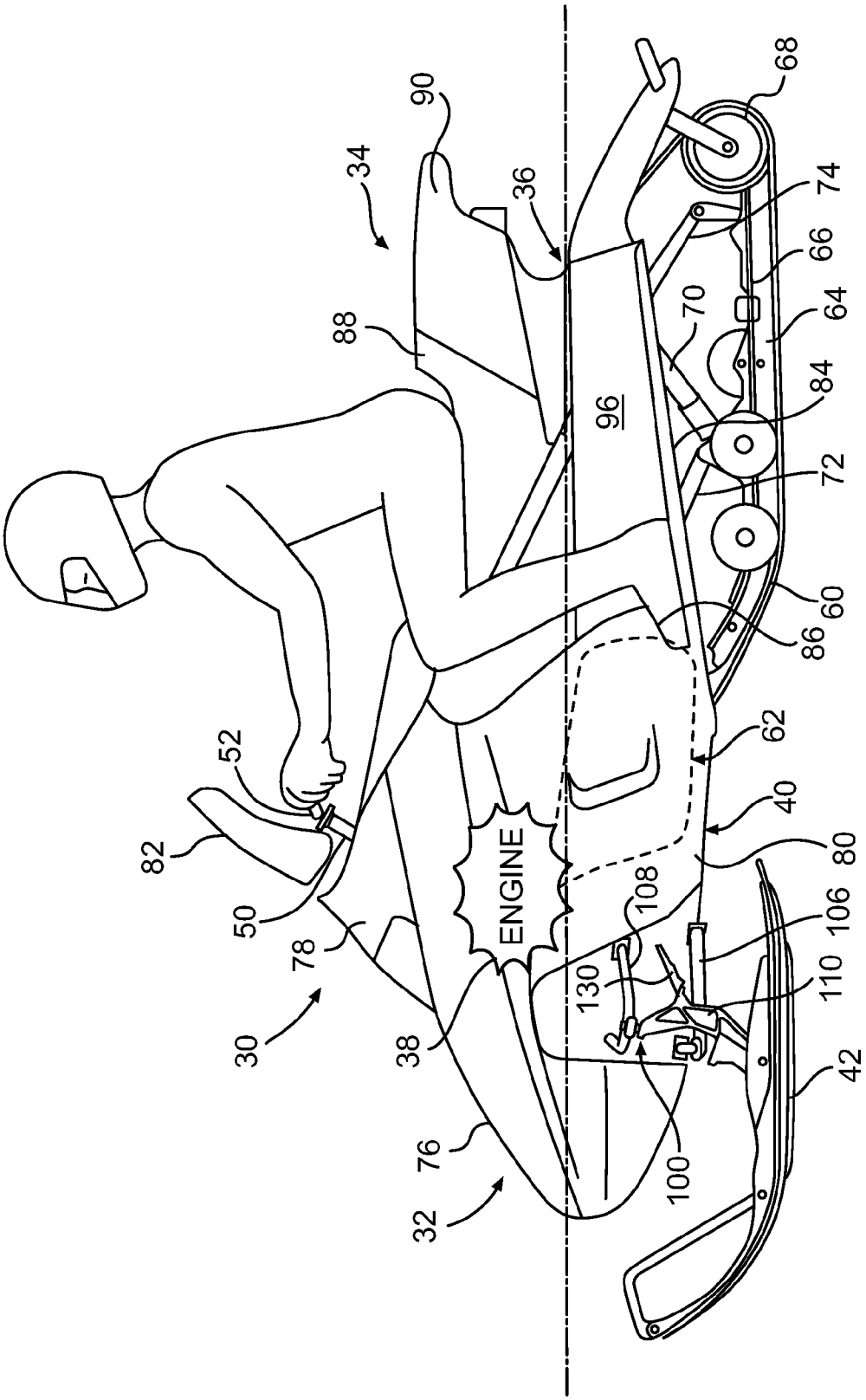
34
90
36
68
74
66
64
88
70
96
84
72
60
86
62
40
80
52
82
50
78
30
38
ENGINE
108
130
106
110
42
76
32
100

FIG. 1

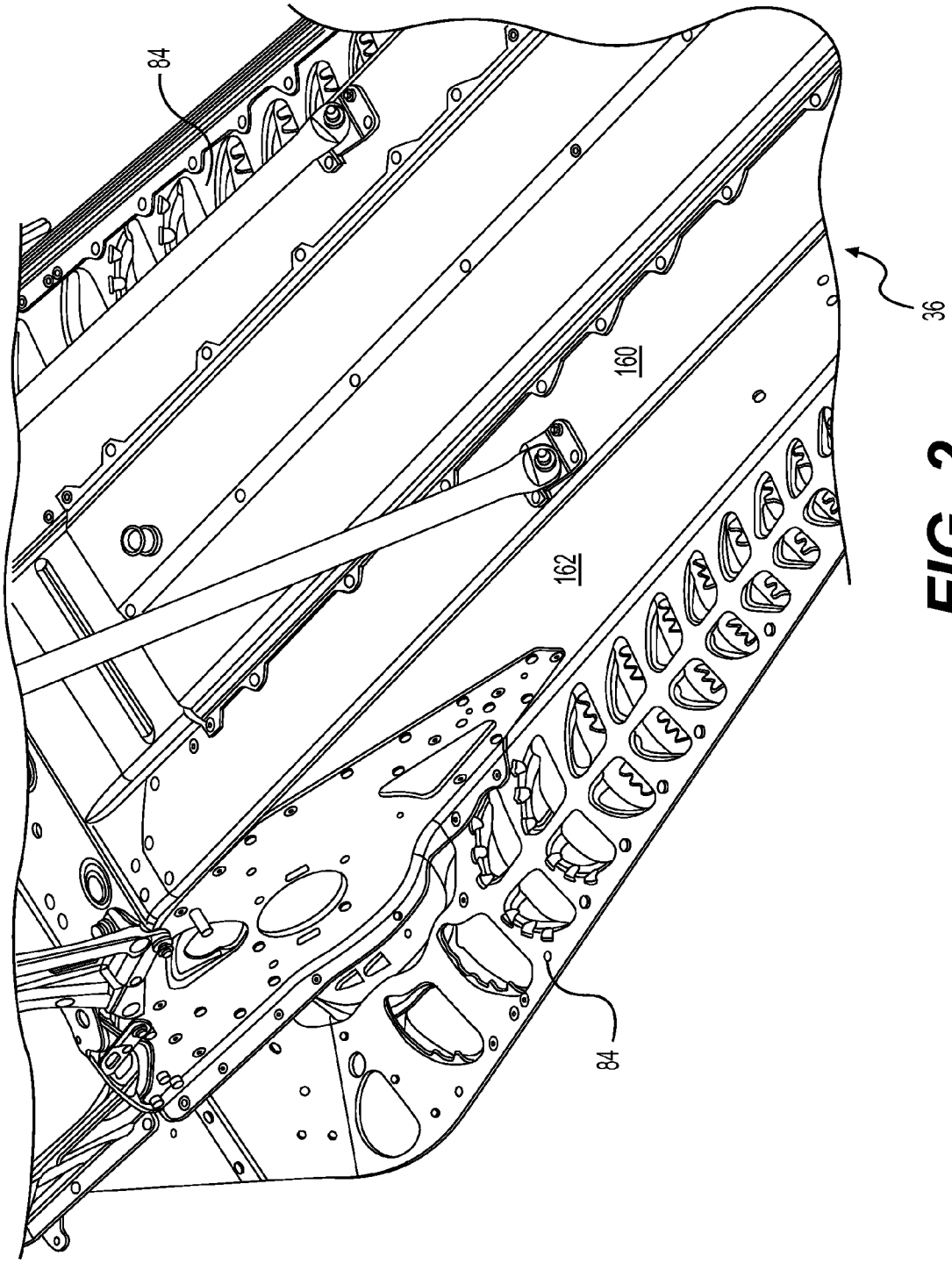

FIG. 2

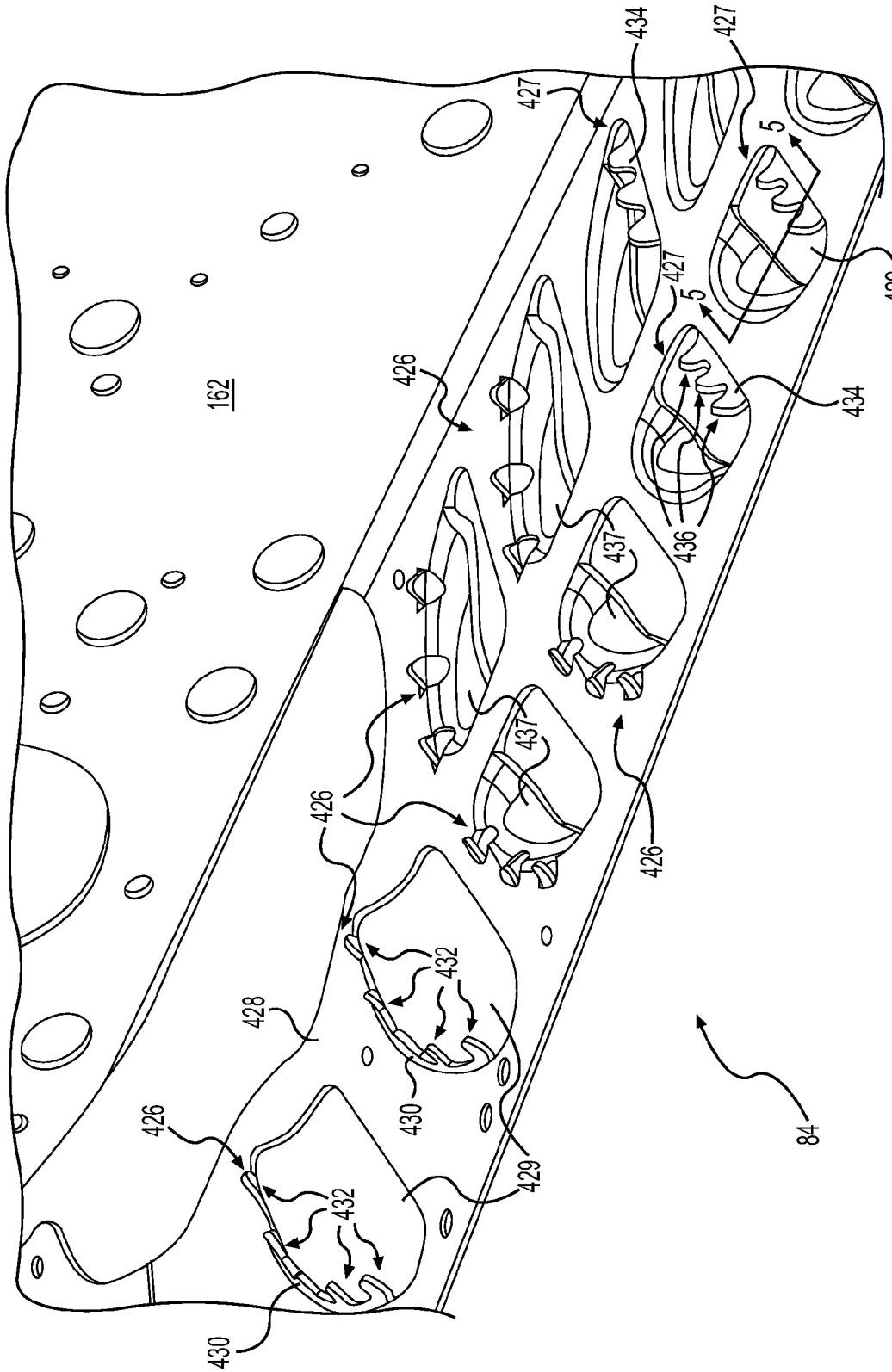

FIG. 3

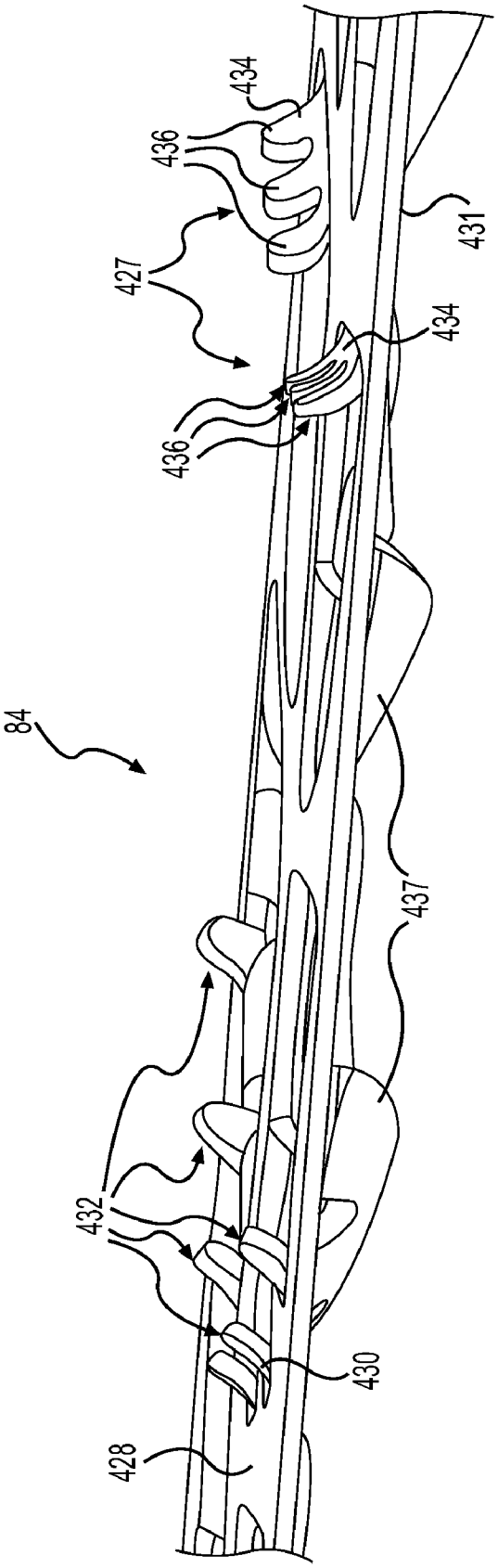

FIG. 4

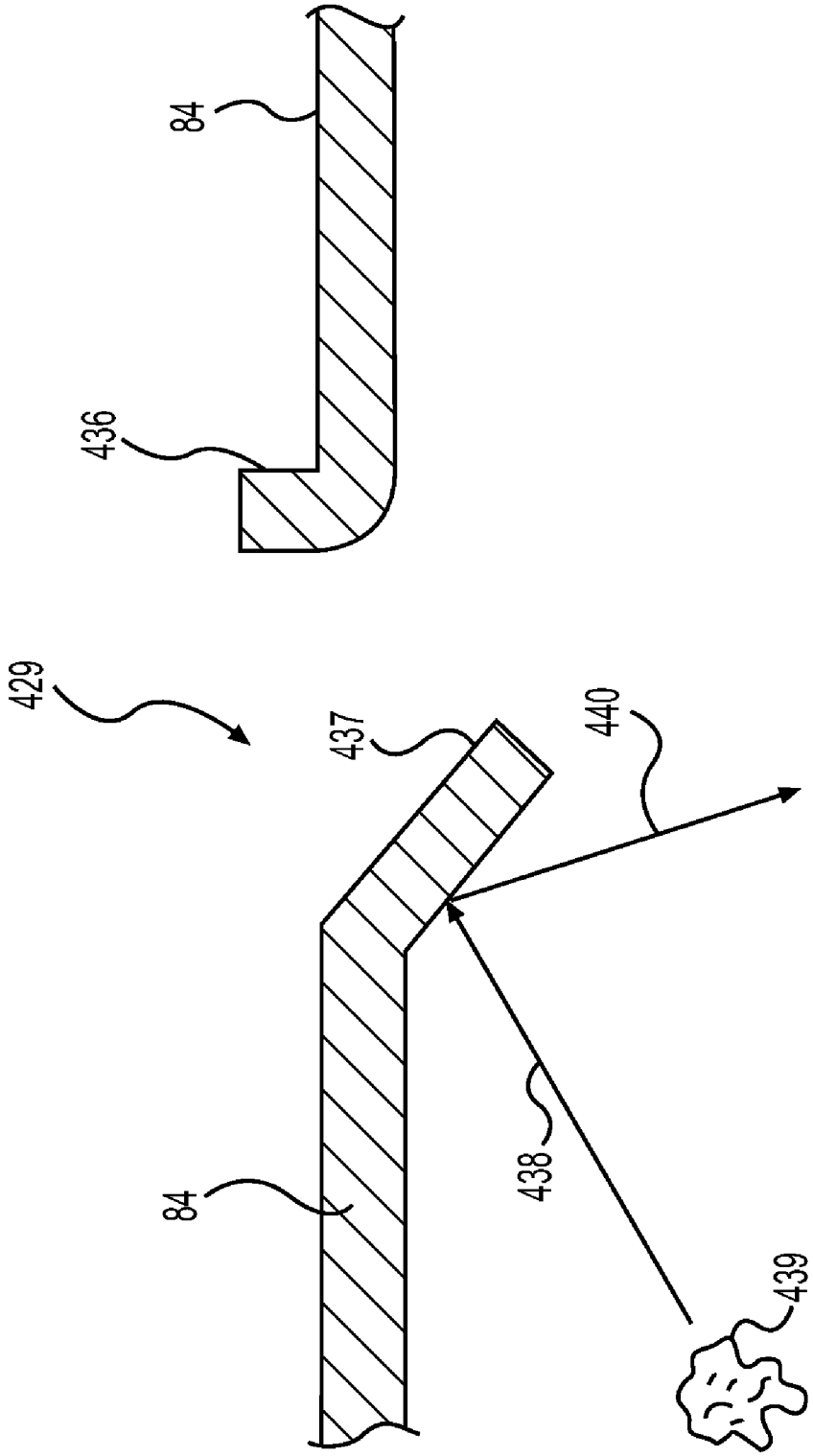

FIG. 5

SNOWMOBILE FOOTREST HAVING FOOT GRIPPING ELEMENTS

FIELD OF THE INVENTION

This invention relates to foot gripping elements for snowmobile footrests.

BACKGROUND OF THE INVENTION

When riding a snowmobile, a rider will generally be seated on a straddle seat with his hands on a handlebar and his feet resting on footrests disposed on either side of the seat.

Snowmobiles are frequently operated on uneven terrain. When a snowmobile encounters a bump as it travels over the ground, the rider may wish to raise himself off the seat and support himself on the footrests in a partially standing position to minimize the impact of the bump. When he does this, his weight is supported entirely by the footrests.

When the snowmobile is being operated, and in particular when the rider is supported entirely by the footrests, it is important for the rider's feet to have good traction on the footrests, so as to maintain the rider's feet in position and prevent them from slipping.

One way to provide improved grip on a snowmobile footrest is shown in U.S. Pat. No. 6,604,594 (Wubbolts) issued on Aug. 12, 2003 and assigned to the owner of the present application, which is incorporated herein by reference in its entirety. Wubbolts describes a snowmobile footrest having foot gripping elements extending upwardly and forwardly from the top surface thereof. While this footrest provides adequate grip for the foot of a rider and prevents slippage in the rearward direction, it is believed that further improvements in snowmobile footrests are possible.

SUMMARY OF THE INVENTION

In the description that follows, the terms "forward" and "rearward" are defined relative to the normal forward direction of travel of a snowmobile.

It was noticed that when a rider is in a seated position, his feet are typically positioned near the front of the footrest, and need to be secured primarily against slippage in the forward direction. When the rider is in a standing position, his feet are typically positioned farther rearward on the footrest, and need to be secured primarily against slippage in the rearward direction. Taking these observations into account, it was found that improvements in snowmobile footrests can be provided, to better stabilize a rider's foot against slippage in the forward direction when the rider is seated and he tends to exert a force on his feet in a forward direction on the footrests, and also to stabilize the rider's foot against slippage in the rearward direction when the rider is standing and he tends to exert a force on his feet in a rearward direction on the footrests. Thus, an improved footrest in accordance with the present invention can better ensure that the rider's feet remain in a desired position while riding the snowmobile in different riding positions.

It is therefore an object of the invention to provide a snowmobile having an improved footrest, at least with respect to some aspects of the prior art.

It is a further object of the invention to provide a snowmobile having an improved footrest. The footrest has a rear portion with upwardly and forwardly extending foot gripping elements to resist slipping of a rider's foot in a rearward direction. The footrest further has a front portion with

upwardly and rearwardly extending foot gripping elements to resist slipping of the rider's foot in a forward direction.

One aspect of the present invention provides a snowmobile comprising a frame including a tunnel. The tunnel has sides, and footrests extending outwardly from the sides thereof for receiving feet of a rider. Each footrest has a top surface, a first foot gripping element extending upwardly from the top surface and angled upwardly and forwardly with respect thereto, and a second foot gripping element extending upwardly from the top surface and angled upwardly and rearwardly with respect thereto. An engine is disposed on the frame at a forward end thereof. A seat is disposed on the tunnel rearward of the engine. A front suspension system is connected to the frame. At least one ski is operatively connected to the frame by the front suspension system. A steering device is disposed on the frame forward of the seat and is operatively connected to the at least one ski for steering the snowmobile. An endless drive track is disposed below the tunnel and operatively connected to the engine for propulsion of the snowmobile.

In a further aspect, the first foot gripping element is one of a first plurality of foot gripping elements extending upwardly from the top surface and angled upwardly and forwardly with respect thereto. The second foot gripping element is one of a second plurality of foot gripping elements extending upwardly from the top surface and angled upwardly and rearwardly with respect thereto.

In a further aspect, each foot gripping element in the first and second pluralities of foot gripping elements comprises a jagged portion at a top thereof.

In a further aspect, the jagged portions define teeth.

In a further aspect, the forward-most first foot gripping element is disposed rearward of the rearward-most second foot gripping element.

In a further aspect, each footrest further comprises a bottom surface, a plurality of holes therethrough, and a plurality of deflector elements associated with the holes and extending downwardly from the bottom surface for discouraging particles from passing through the holes.

In a further aspect, each foot gripping element in the first and second pluralities of foot gripping elements is disposed along a contour of at least one of the plurality of holes.

In a further aspect, each foot gripping element in the first plurality of foot gripping elements is disposed along a rearward portion of the contour of at least one of the plurality of holes. Each foot gripping element in the second plurality of foot gripping elements is disposed along a forward portion of the contour of at least one of the plurality of holes.

In a further aspect, the tunnel is made at least in part from sheet metal.

In a further aspect, the first and second foot gripping elements are integrally formed with the footrests.

Another aspect of the present invention provides a snowmobile footrest, comprising a top surface, a first foot gripping element extending upwardly and forwardly from the top surface, and a second foot gripping element extending upwardly and rearwardly from the top surface.

In a further aspect, the first foot gripping element is one of a first plurality of foot gripping elements extending upwardly from the top surface and angled upwardly and forwardly with respect thereto. The second foot gripping element is one of a second plurality of foot gripping elements extending upwardly from the top surface and angled upwardly and rearwardly with respect thereto.

In a further aspect, each foot gripping element in the first and second pluralities of foot gripping elements comprises a jagged portion at a top thereof.

In a further aspect, the jagged portion defines teeth.

In a further aspect, the forward-most first foot gripping element is disposed rearward of the rearward-most second foot gripping element.

In a further aspect, the footrest further comprises a bottom surface, a plurality of holes therethrough, and a plurality of deflector elements associated with the holes and extending downwardly from the bottom surface for discouraging particles from passing through the holes.

In a further aspect, each foot gripping element in the first and second pluralities of foot gripping elements is disposed along a contour of at least one of the plurality of holes.

In a further aspect, each foot gripping element in the first plurality of foot gripping elements is disposed along a rearward portion of the contour of at least one of the plurality of holes. Each foot gripping element in the second plurality of foot gripping elements is disposed along a forward portion of the contour of at least one of the plurality of holes.

In a further aspect, the footrest is made at least in part from sheet metal.

In a further aspect, the first and second foot gripping elements are integrally formed with the footrest.

Other objects, aspects and features of the present invention will be made apparent by the following description, claims and accompanying drawings.

BRIEF DESCRIPTION OF THE DRAWINGS

For a better understanding of the present invention, as well as other aspects and further features thereof, reference is made to the following description which is to be used in conjunction with the accompanying drawings, where:

FIG. **1** is a side elevation view of a snowmobile having footrests in accordance with aspects of the present invention;

FIG. **2** is a partial perspective view of the frame of the snowmobile of FIG. **1**;

FIG. **3** is a perspective view of a left footrest of the snowmobile of FIG. **1**;

FIG. **4** is a side view of the footrest shown in FIG. **3**; and

FIG. **5** is a cross-sectional illustration of the footrest of FIG. **3** taken along line **5-5** in FIG. **3**.

DETAILED DESCRIPTION OF THE PREFERRED EMBODIMENT

FIG. **1** illustrates a snowmobile **30** in accordance with one specific embodiment of the invention. The snowmobile **30** includes a forward end **32** and a rearward end **34** which are defined consistently with a travel direction of the vehicle. The snowmobile **30** includes a frame **36** comprising an engine cradle portion **40** and a tunnel **96**. Tunnel **96** generally consists of one or more pieces of a suitable sheet metal such as steel, stamped into an inverted U-shape. It is understood that tunnel **96** may be made with materials other than steel, and that it can be formed into the desired shape by methods other than stamping, without departing from the spirit of the invention. Tunnel **96** is connected to the engine cradle portion **40** and extends rearwardly along the longitudinal axis of the snowmobile **30**. While hidden behind a front fairing **54**, an engine **38**, schematically illustrated, provides motive force for the snowmobile **30** and is carried by the engine cradle portion **40** of the frame **36**.

Two front skis **42** are attached to the front portion of the frame **36** through a front suspension system **100** in accordance with one embodiment of the invention. The front suspension system **100** generally comprises a double A-arm type suspension, having upper A-arms **108** and lower A-arms **106** on either side of the vehicle linking spindles **110** to the frame **36**. The spindles **110** are attached to the skis **42** at their lower ends and rotate left and right therewith. The spindles **110** are also connected to a steering column **50** via steering rods **130**. The steering column **50** is attached at its upper end to a steering device such as a handlebar **52** which is positioned forward of a rider and slightly behind the engine **38** to rotate the skis **42**, thereby providing directional control of the snowmobile **30**. As illustrated in dotted lines, the steering column **50** passes in front of the engine **38**. The steering column **50** is designed with a bend **53** (best shown in FIG. **5**) such that the steering column **50** passes in front and above the engine **38** and clears the engine **38** throughout the range of rotation of the steering column **50** when the steering device, which in this embodiment is a handlebar **52**, is turned to the right or to the left. Thus, by turning the handlebar **52**, the steering column **50** rotates, the spindles **110** are pivoted, and the skis **42** are turned to steer the snowmobile **30** in a desired direction.

An endless drive track **60**, which provides propulsion to the snowmobile **30**, is disposed under the tunnel **96** of the frame **36** with the upper portion of the drive track **60** accommodated within the tunnel **96**. The endless drive track **60** is operatively connected to the engine **38** through a belt transmission system **62** which is schematically illustrated by broken lines. The drive train of the snowmobile **30** includes all the components of the snowmobile **30** whose function is to transmit power from the engine to the ground. The endless drive track **60** is mounted to the tunnel **96** via a rear suspension assembly **64**. The rear suspension assembly **64** includes rear suspension arms **72** and **74**, a pair of slide rails **66** which generally position and guide the endless drive track **60** and idler wheels **68** engaged therewith. Rear suspension arms **72** and **74** connect the slide rails **66** and idler wheels **68** to the tunnel **96** of the frame **36**. The slide rails **66** typically include a sliding lower surface made of polyethylene to reduce contact friction between the slide rails **66** and the drive track **60**. The rear suspension assembly **64** also includes one or more shock absorbers **70** which may further include a coil spring (not shown) surrounding the individual shock absorbers **70**.

At the front end **32**, the snowmobile **30** includes an external shell consisting of fairings **76** that enclose and protect the engine **38** and transmission **62** and that can be decorated to render the snowmobile **30** more aesthetically pleasing. Typically, the fairings **76** include a hood **78** and one or more side panels **80** which can be opened to allow access to the engine **38** and the transmission **62** when this is required, for example, for inspection or maintenance. The side panels **80** can be opened away from the snowmobile **30** along a vertical axis, independently from the hood **78**, which pivots forward about a horizontally extending axis. A windshield **82**, which may be connected either to the fairings **76** or directly to the handlebar **52**, acts as wind deflector to lessen the force of the air on the rider when the snowmobile is moving.

A straddle-type seat **88** is positioned atop and mounted to the tunnel **96**. At the rear of the straddle seat **88**, a storage compartment **90** is provided. A passenger seat (not shown) can also be provided instead of the storage compartment **90**. Two footrests **84**, generally extending outwardly from the tunnel **96**, are also positioned on either side of the straddle seat **88** to accommodate the rider's feet and provide a rigid platform for the rider to stand on when maneuvering the snowmobile **30**.

FIG. **2** illustrates tunnel **96** in greater detail. Tunnel **96** includes a top plate **160** with left and right downwardly

extending side plates **162**. A left footrest **84** extends outwardly from the bottom of left side plate **162**. Similarly, a right footrest **84** extends outwardly from the bottom portion of right side plate **162**. Left and right footrests **84** provide a location along the tunnel **96** onto which a rider may place his feet while operating the snowmobile **30**. As the left and right footrests **84** have substantially the same structure, only the left footrest **84** will be described in detail below. The right footrest **84** is substantially a mirror image of the left footrest **84**.

Referring now to FIGS. **3** and **4**, the left footrest **84** is provided with a number of foot gripping portions **426** and **427**. Foot gripping portions **426** may be constructed to be part of the contour of a hole **429** through the foot rest **84**. The hole **429** allows dirt and snow that may have accumulated on the top surface **428** of the footrest **84** to fall through the footrest **84** and away from the foot of the rider. Foot gripping elements **426** include a first plurality of jagged elements **430** with teeth **432** angled upwardly and rearwardly from footrest **84**. Foot gripping elements **427** include a second plurality of jagged elements **434** with teeth **436** angled upwardly and forwardly from footrest **84**. A deflector element **437** extending downwardly from the bottom surface **431** of the footrest is also provided, and will be described in greater detail below. The deflector element **437** discourages dirt or snow particles from passing upward through the holes **429** and accumulating on the top surface **428** of the footrest **84** while the snowmobile **30** is in use. The deflector portion **437** and the jagged portion **430** are arranged forward of hole **429** and the jagged portion **434** are arranged rearward of hole **429**. This minimizes the potential for particles **439** to pass through hole **429** and accumulate on the top surface **428** of footrests **84**. Other arrangements of the deflector portion **437** and of the jagged portions **430** and **434** are possible within the scope of the invention. In addition, the deflector portion **437** may be omitted without departing from the scope of the invention.

Foot gripping elements **426** and **427** provide traction for the feet of the riders because they extend upwardly from the top surface **428** of foot rest **84**. In particular, jagged portions **430** and **434** maintain the rider's feet in position by opposing slippage in both forward and rearward directions according to the direction at which they are angled. The foot gripping elements **426** are arranged farther forward than the foot gripping elements **427**. In this arrangement, the jagged elements **430** oppose slipping of the rider's foot in a forward direction and the jagged elements **434** oppose slipping of the rider's foot in a rearward direction. As a result, the foot gripping elements **426**, **427** will tend to maintain the foot of the rider in a central position on the foot rest **84**. In addition, if the rider's foot is positioned near the toe hold **86** toward the front of the foot rest **84**, the upwardly and rearwardly extending jagged elements **430** disposed on the front portion of the foot rest **84** will not impede the movement of the rider's foot in a rearward direction for removal from the toe hold **86**.

Referring now to FIG. **5**, it can be seen that the deflector elements **437** extend downwardly and rearwardly from the holes **429** in which they are located, and deflect snow or dirt particles **439** that may be stirred up by the movement of the snowmobile **30** over the ground. If a snow or dirt particle **439** moves toward the bottom surface **431** of the foot rest **84**, in the direction shown by arrow **438**, the deflector element **437** will deflect the particle **439** so that it travels in the direction shown by arrow **440** is away from the hole **429**. As a result, particle **439** is discouraged from passing through hole **429** and therefore from accumulating on the top surface **428** of the foot rest **84**.

To construct foot gripping elements **426**, **427**, the jagged portions **430** and **434** and deflector portion **437** are simultaneously stamped from footrest **84**, which is preferably made of sheet metal. Jagged portions **430** and **434** are then bent upwardly and deflector portion **437** is bent downwardly so that the portions of foot gripping elements **426**, **427** are in their corresponding orientation.

Modifications and improvement to the above described embodiments of the present invention may become apparent to those skilled in the art. The foregoing description is intended to be exemplary rather than limiting. Furthermore, the dimensions of features of various components that may appear on the drawings are not meant to be limiting, and the size of the components therein can vary from the size that may be portrayed in the figures herein. The scope of the present invention is therefore intended to be limited solely by the scope of the appended claims.

What is claimed is:

1. A snowmobile comprising:

a frame including a tunnel, the tunnel having sides;

an engine disposed on the frame at a forward end thereof;

a seat disposed on the tunnel rearward of the engine;

a front suspension system connected to the frame;

at least one ski operatively connected to the frame via the front suspension system;

a steering device disposed on the frame forward of the seat and being operatively connected to the at least one ski for steering the snowmobile; and

an endless drive track disposed below the tunnel and operatively connected to the engine for propulsion of the snowmobile; and

a pair of footrests, one footrest extending outwardly from each side of the tunnel, each footrest including;

a top surface;

a first plurality of holes through the footrest;

a second plurality of holes though the footrest;

a first plurality of foot gripping elements extending upwardly from the top surface and angled upwardly and forwardly with respect thereto, each foot gripping element in the first plurality of foot gripping elements being disposed along a rearward portion of a contour of at least one of the first plurality of holes, the first plurality of holes only having foot gripping elements of the first plurality of foot gripping elements; and

a second plurality of foot gripping elements extending upwardly from the top surface and angled upwardly and rearwardly with respect thereto, each foot gripping element in the second plurality of foot gripping elements being disposed along a forward portion of a contour of at least one of the second plurality of holes, the second plurality of holes only having foot gripping elements of the second plurality of foot gripping elements, a forward-most first foot gripping element being disposed rearward of a rearward-most second foot gripping element.

2. The snowmobile of claim **1**, wherein, in respect of each one of the pair of footrests, each foot gripping element in the first and second pluralities of foot gripping elements comprises a jagged portion at a top thereof.

3. The snowmobile of claim **1**, wherein, in respect of each one of the pair of footrests, the first and second pluralities of foot gripping elements are sole foot gripping elements extending upwardly from the top surface.

4. The snowmobile of claim **1**, wherein each one of the pair of footrests further includes;

a bottom surface; and

a plurality of deflector elements associated with at least some of the first plurality and the second plurality of holes and extending downwardly from the bottom surface for discouraging particles from passing through the at least some of the first plurality and the second plurality of holes.

5. The snowmobile of claim **1**, wherein the tunnel is made at least in part from sheet metal.

6. The snowmobile of claim **5**, wherein, in respect of each one of the pair of footrests, the first and second pluralities of foot gripping elements are integrally formed with the footrest.

7. A snowmobile footrest, comprising:

a top surface;

a first plurality of holes through the footrest;

a second plurality of holes through the footrest;

a first plurality of foot gripping elements extending upwardly and forwardly from the top surface, each foot gripping element in the first plurality of foot gripping elements being disposed along a rearward portion of a contour of at least one of the first plurality of holes, the plurality of first holes only having foot gripping elements of the first plurality of foot gripping elements; and

a second plurality of foot gripping elements extending upwardly and rearwardly from the top surface, each foot gripping element in the second plurality of foot gripping elements being disposed along a forward portion of a contour of at least one of the second plurality of holes, the plurality of second holes only having foot gripping elements of the second plurality of foot gripping elements, a forward-most first foot gripping element being disposed rearward of a rearward-most second foot gripping element.

8. The footrest of claim **7**, wherein each foot gripping element in the first and second pluralities of foot gripping elements comprises a jagged portion at a top thereof.

9. The footrest of claim **7**, wherein the first and second pluralities of foot gripping elements are sole foot gripping elements extending upwardly from the top surface.

10. The footrest of claim **7**, further comprising:

a bottom surface; and

a plurality of deflector elements associated with at least some of the first plurality and the second plurality of holes and extending downwardly from the bottom surface for discouraging particles from passing through the at least some of the first plurality and the second plurality of holes.

11. The footrest of claim **7**, wherein the footrest is made at least in part from sheet metal.

12. The footrest of claim **11**, wherein the first and second pluralities of foot gripping elements are integrally formed with the footrest.

* * * * *