US007780247B2

(12) **United States Patent**
Paradis et al.

(10) **Patent No.: US 7,780,247 B2**
(45) **Date of Patent: Aug. 24, 2010**

(54) **TRACK BELT GUIDE WHEELS ASSEMBLY**

(75) Inventors: **Michel Paradis**, Granby (CA); **Rémy Oddo**, Rock-Forest (CA)

(73) Assignee: **Camoplast Inc.** (CA)

(*) Notice: Subject to any disclaimer, the term of this patent is extended or adjusted under 35 U.S.C. 154(b) by 0 days.

(21) Appl. No.: **11/966,467**

(22) Filed: **Dec. 28, 2007**

(65) **Prior Publication Data**

US 2008/0100133 A1 May 1, 2008

Related U.S. Application Data

(63) Continuation-in-part of application No. 11/058,579, filed on Feb. 15, 2005, now abandoned.

(30) **Foreign Application Priority Data**

Feb. 17, 2004 (CA) 2457999

(51) **Int. Cl.**
B62D 55/096 (2006.01)

(52) **U.S. Cl.** **305/165**; 305/157; 305/169; 305/178

(58) **Field of Classification Search** 305/120, 305/121, 124, 127, 128, 129, 130, 131, 132, 305/142, 157, 165, 167, 168, 169, 178, 179, 305/194; 180/9.3
See application file for complete search history.

(56) **References Cited**

U.S. PATENT DOCUMENTS

2,025,999	A *	12/1935	Myers	305/165
3,386,778	A	6/1968	Rymes	
3,722,961	A *	3/1973	Haley et al.	305/127
3,781,067	A *	12/1973	Dodson et al.	305/168
3,877,534	A	4/1975	Krause	
3,887,243	A *	6/1975	Chaumont	305/128
4,023,865	A *	5/1977	Morissette	305/168
5,709,440	A	1/1998	Lecours	
5,713,645	A *	2/1998	Thompson et al.	305/168
6,068,354	A	5/2000	Akiyama et al.	
6,112,840	A *	9/2000	Forbes	180/193
6,206,124	B1	3/2001	Mallette et al.	
6,609,771	B2	8/2003	Morin et al.	
6,626,258	B1	9/2003	Forbes	
7,128,176	B1	10/2006	Mills et al.	
7,159,955	B2 *	1/2007	St-Pierre et al.	305/168
2003/0201128	A1	10/2003	Girouard et al.	
2007/0063584	A1 *	3/2007	St-Pierre	305/169

FOREIGN PATENT DOCUMENTS

CA	995718	8/1976
CA	1003012	1/1977
CA	1030195	4/1978

(Continued)

Primary Examiner—S. Joseph Morano
Assistant Examiner—Kip T Kotter
(74) *Attorney, Agent, or Firm*—Akerman Senterfitt

(57) **ABSTRACT**

An endless belt body for a track assembly, comprising through holes, between traction lugs of the ground-engaging surface thereof, along a length thereof, located in at least one of: i) the central region of a width of the endless belt body, and ii) on the lateral parts of the width of the endless belt body.

54 Claims, 6 Drawing Sheets

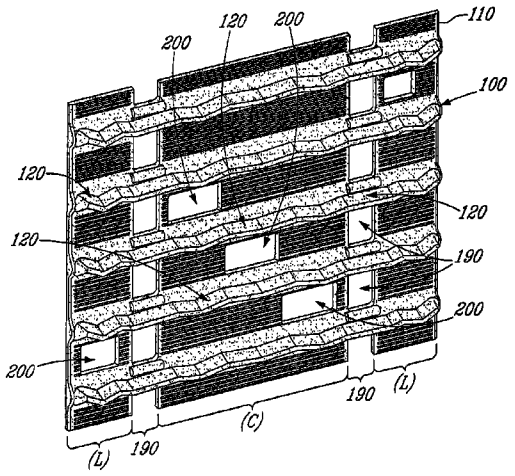

FOREIGN PATENT DOCUMENTS

CA	1044284	12/1978
CA	1046112	1/1979
CA	1046562	1/1979
CA	1047582	1/1979
CA	1051957	4/1979
CA	1057799	7/1979
CA	1081292	7/1980
CA	1098567	3/1981
CA	1296374	2/1992
CA	2143802	8/1996
CA	2182845	3/1999
CA	2332224	7/2002
CA	2337466	8/2002

* cited by examiner

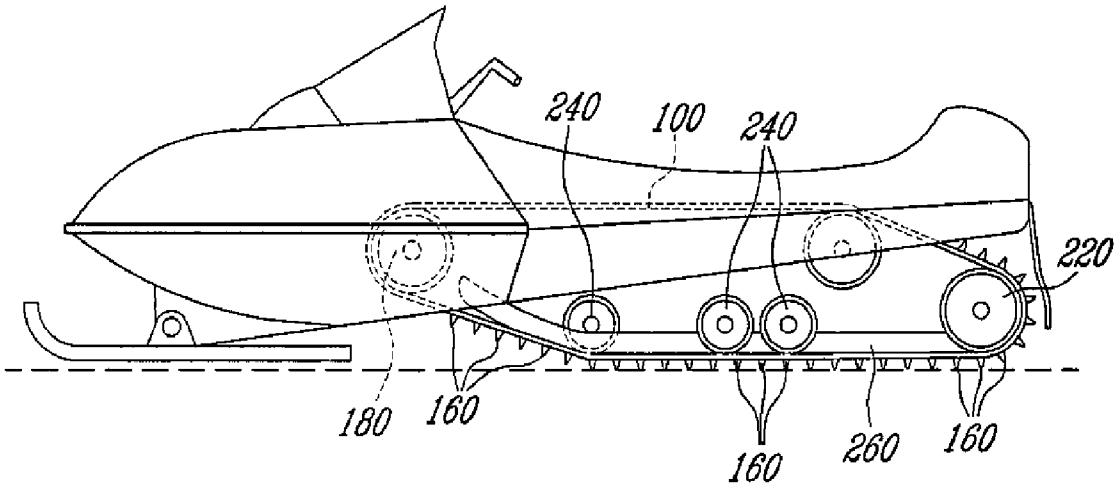

FIG. 1 (PRIOR ART)

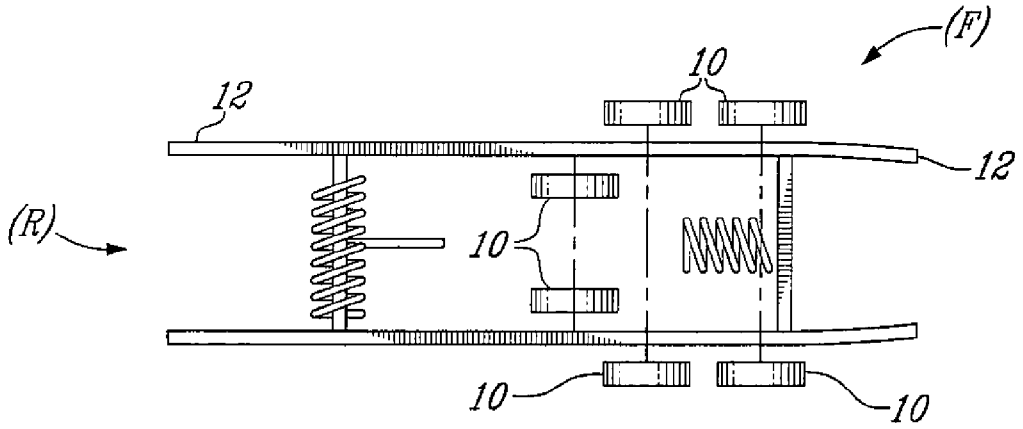

FIG. 2A (Prior art)

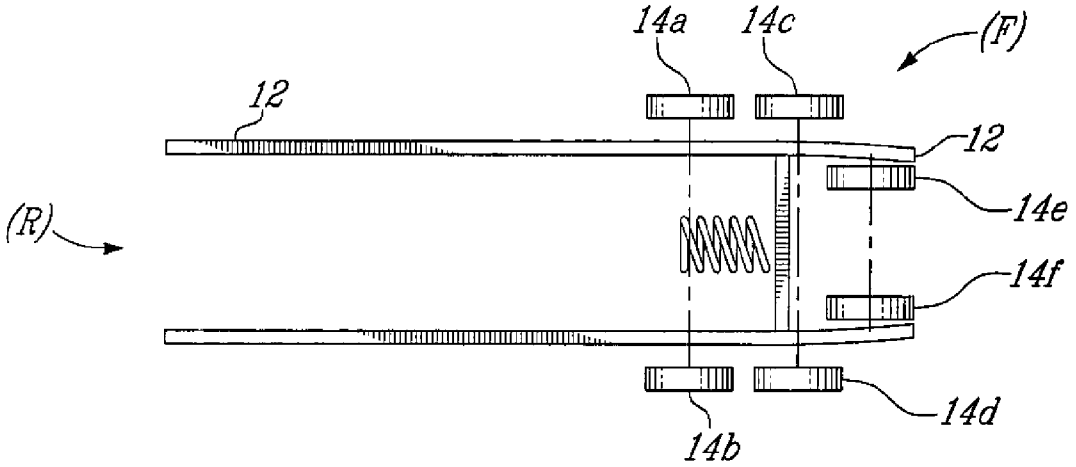

FIG. 2B

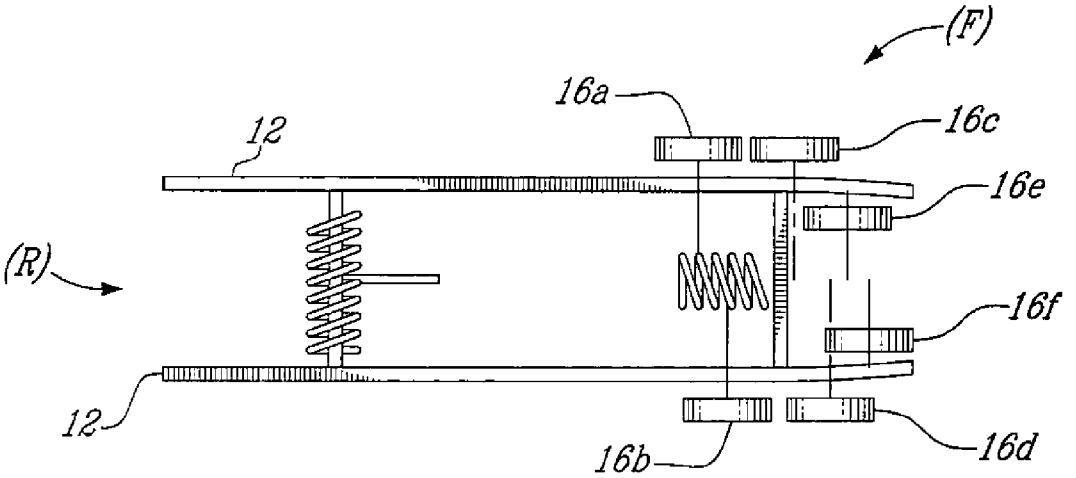

FIG. 2C

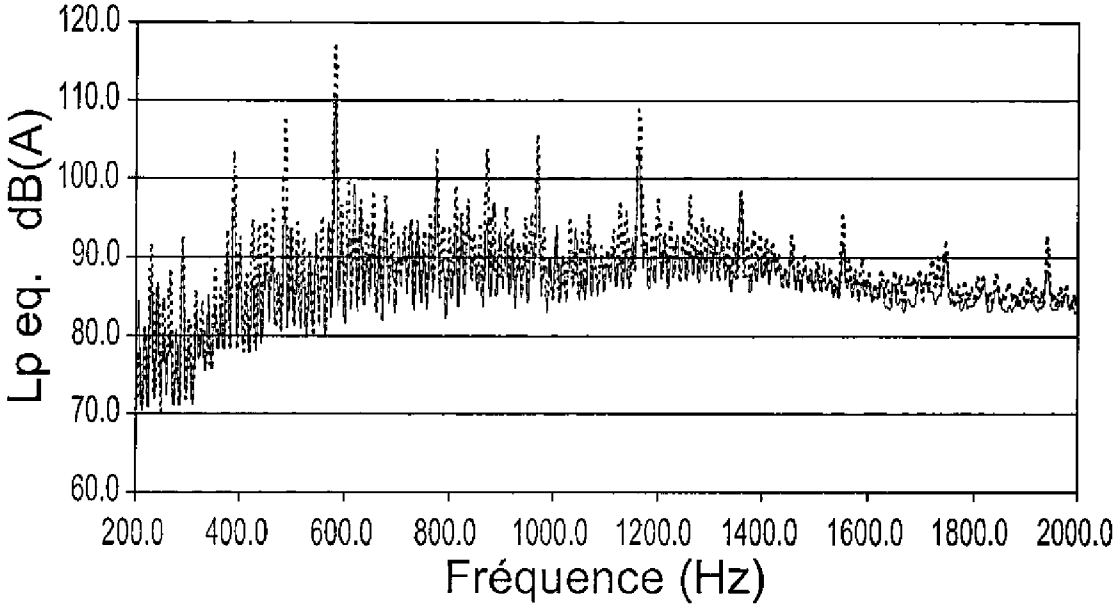
120.0
110.0
100.0
90.0
80.0
70.0
60.0
Lp eq. dB(A)
200.0
400.0
600.0
800.0
1000.0
1200.0
1400.0
1600.0
1800.0
2000.0
Fréquence (Hz)

FIG. 3A

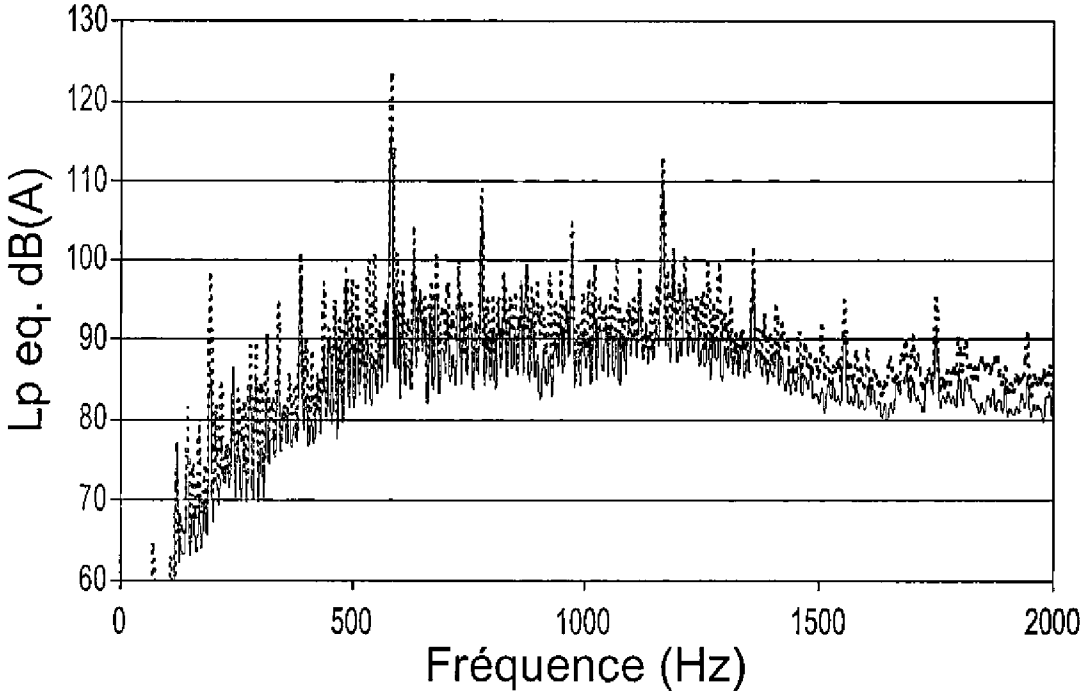
130
120
110
100
90
80
70
60
Lp eq. dB(A)
0
500
1000
1500
2000
Fréquence (Hz)

FIG. 3B

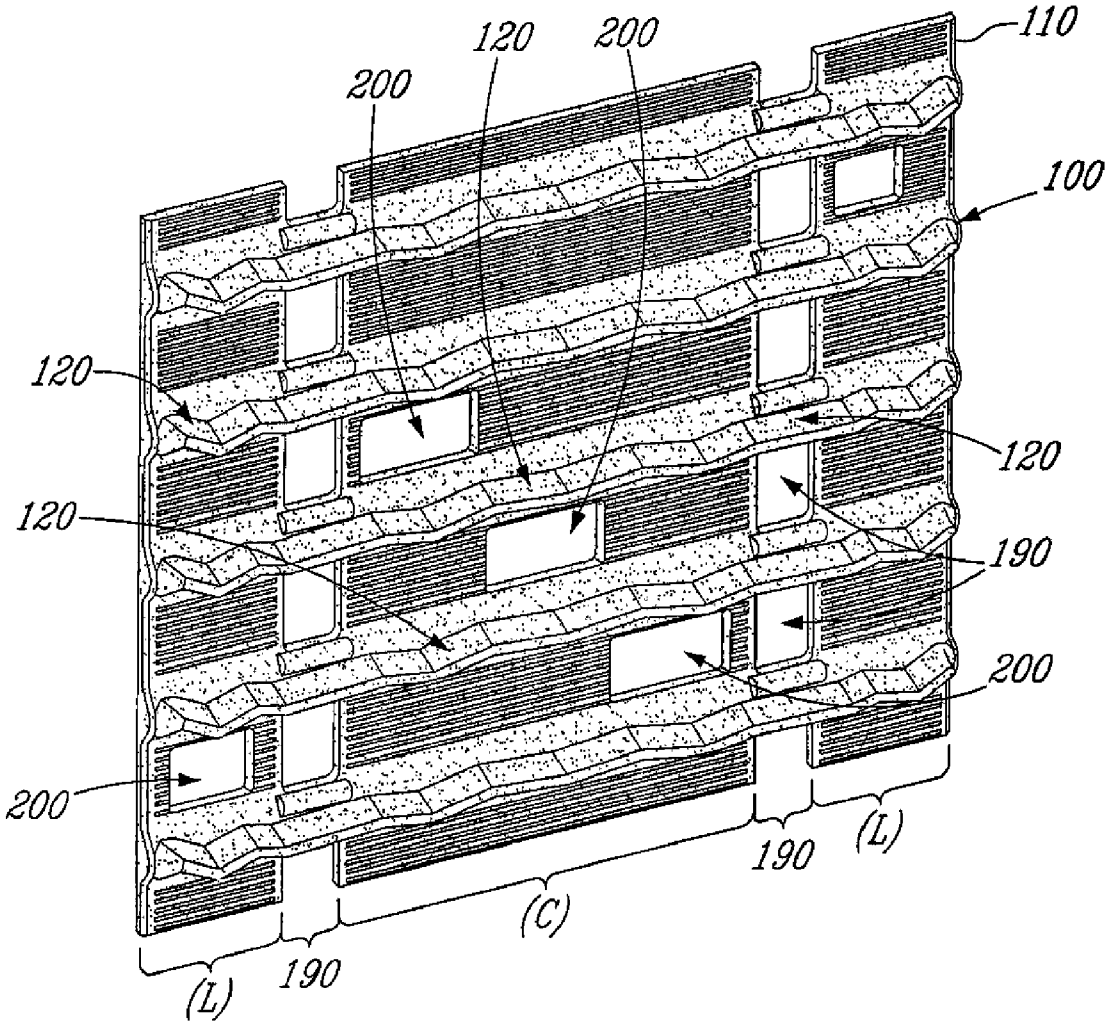

FIG. 4

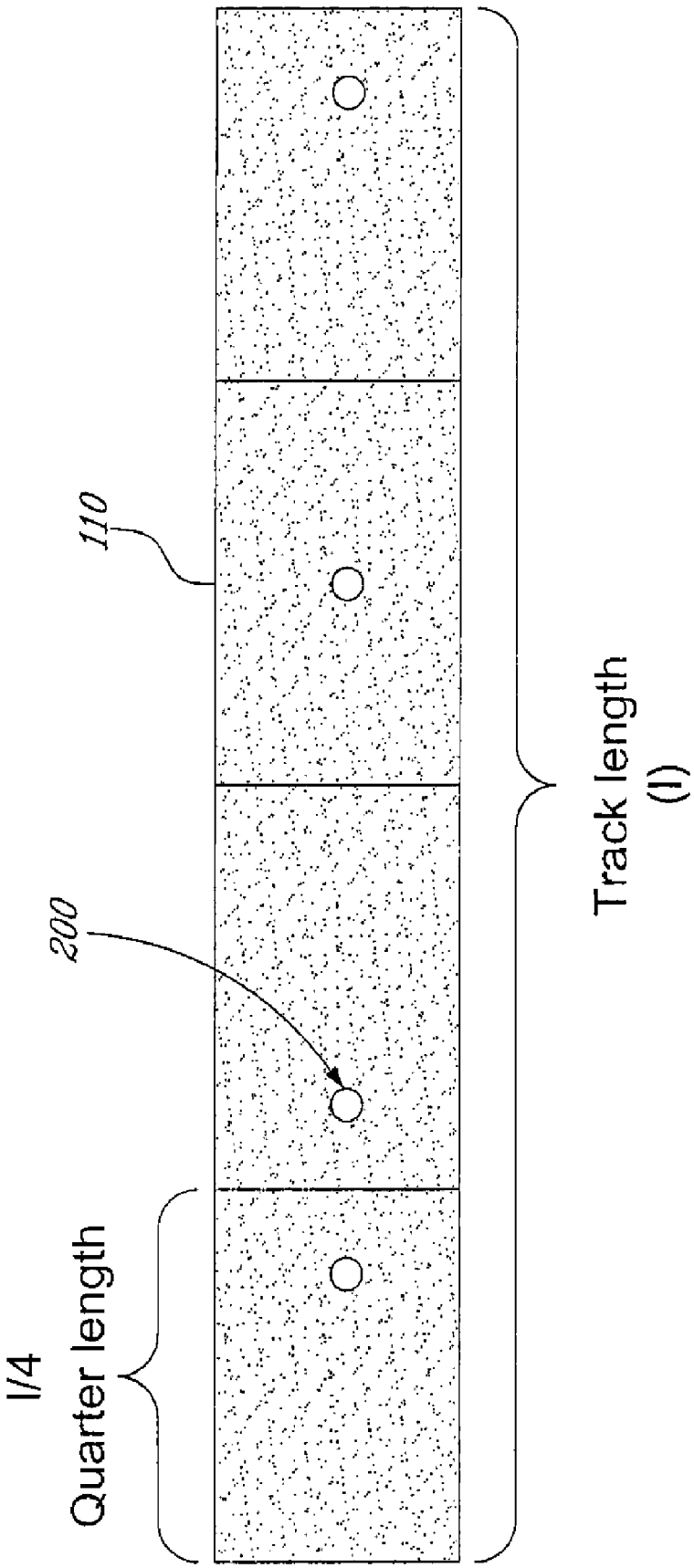

FIG. 5

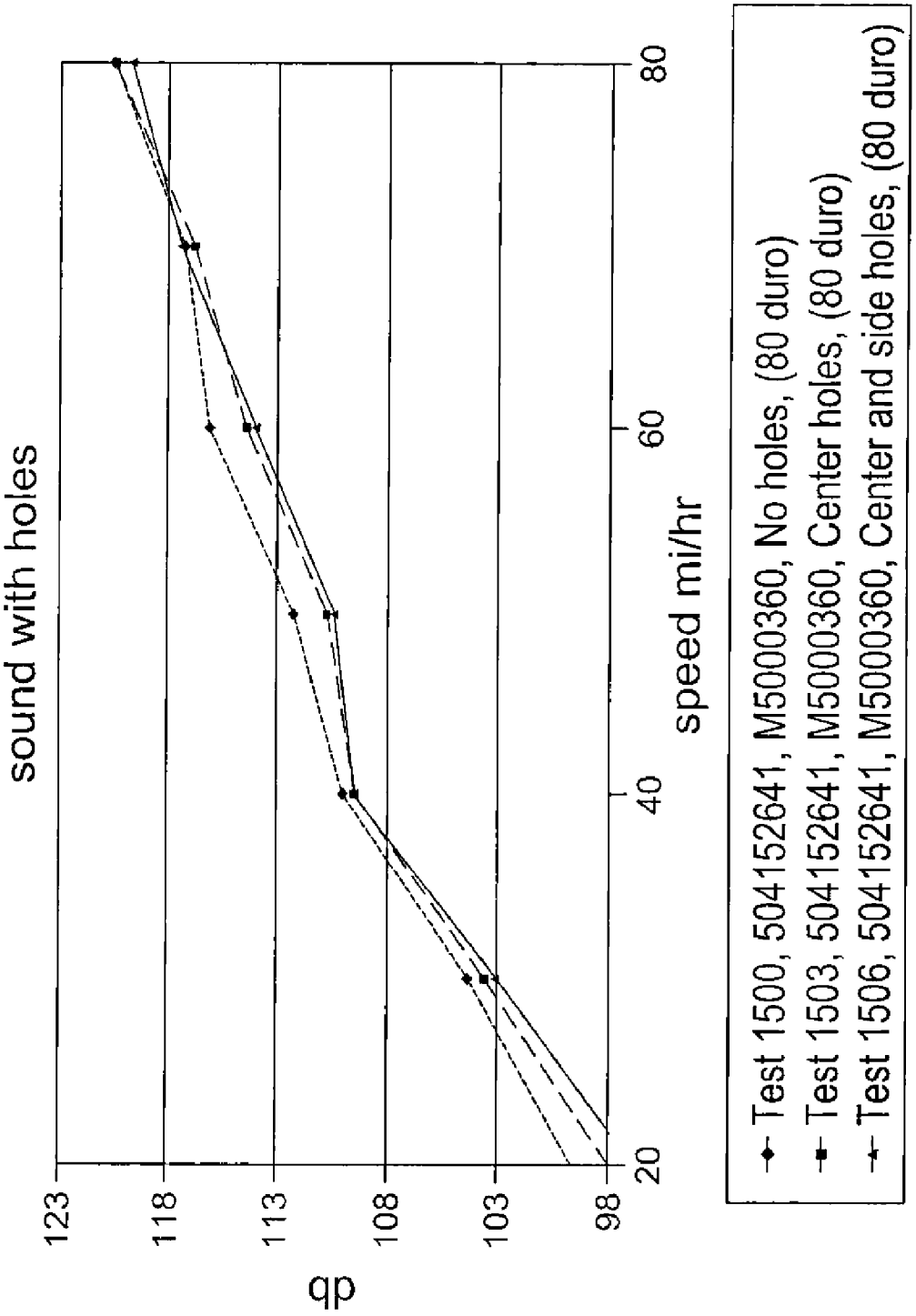
sound with holes
db
123
118
113
108
103
98
20
40
60
80
speed mi/hr
Test 1500, 504152641, M5000360, No holes, (80 duro)
Test 1503, 504152641, M5000360, Center holes, (80 duro)
Test 1506, 504152641, M5000360, Center and side holes, (80 duro)

FIG. 8

TRACK BELT GUIDE WHEELS ASSEMBLY

CROSS REFERENCE TO RELATED APPLICATION

This application is a continuation-in-part of application of U.S. patent application Ser. No. 11/058,579 now pending, which itself claims priority on Canadian application no 2,457,999 filed on Feb. 17, 2004. All documents above are herein incorporated by reference.

FIELD OF THE INVENTION

The present invention relates to endless track belts. More specifically, the present invention is concerned with a noiseless track belt assembly.

BACKGROUND OF THE INVENTION

An endless track belt assembly for propelling a snowmobile over snow, ice, or other similar ground structure typically, as illustrated for example in FIG. **1**, comprises an endless elongated body **100** going around a rear wheel **220** and a front wheel **180**, and having a ground-engaging outer surface and an inner surface. The track belt assembly receives and supports, on a lower run thereof, a suspension comprising a plurality of guide wheels **240**, and guide rails **260**. The ground-engaging surface typically bears a series of spaced traction lugs **160**.

In FIG. **2**(A), small guiding wheels **10** are positioned transversally in aligned pairs along guide rails **12** of the track, shocks being provided between the guide rails **12**.

It is known that the noise generated by tracked vehicle such as snowmobiles is essentially produced by the endless belt track thereof. An analysis of a frequency spectrum of the noise generated by a tracked vehicle shows a main peak at a frequency corresponding to a driving frequency of the track belt and to harmonics thereof.

The driving frequency F_e of the track belt may be calculated from a number n of tooth of the wheel and a speed of rotation rpm of the wheel in turn per minute, using the following relation:

$$F_e = \frac{n \cdot rpm}{60}$$

Since the track has a constant pitch, factors that may modify the driving frequency thereof may comprise the mounting of the wheel, an action of the guiding wheels on the reinforcing rods, an action of the small guiding wheels on the guide rails, an action of the traction clips on the guide rails and an impact of the profiles with the ground, for example.

One of several methods actually contemplated for reducing an occurrence of peaks in acoustic spectra of tracked vehicle associated with repetitive events consists of breaking such repetitive sequences by causing a random spreading of the different events submitted to the track. The result is a distribution of energy on different harmonics of the critical frequency Fe.

It has been suggested to create such a random spreading by providing non-regular profiles on the ground-engaging surface of the track for example.

It has also been suggested to provide clips on each profile of the track.

There is still a need in the art for endless track belts producing reduced noise.

SUMMARY OF THE INVENTION

More specifically, there is provided a track assembly comprising an endless elongated body going around a rear wheel and a front wheel, said body having an inner surface and a ground-engaging outer surface, the ground-engaging outer surface being provided with traction lugs, wherein the endless elongated body comprises open holes along a length thereof, between traction lugs.

There is further provided a belt assembly, comprising a rear wheel, a front wheel, an endless elongated belt body disposed around the rear wheel and the front wheel, the track belt body having a ground-engaging outer surface and an inner surface, and defining a longitudinal direction of the assembly; and a suspension comprising a plurality of pairs of guide wheels attached to guide rails running between the front wheel and the rear wheel, the guide wheels being all located in a front region, close to the front wheel, of a length of about at most a third of the length of the guide rails, and being supported on the inner surface of the track belt body; wherein a pair of guide wheels is staggered such that each wheel of the pair is in a staggered position with respect to its counterpart such that the wheels of the staggered pair do not simultaneously impact the inner surface on rotation of the track belt, and wherein the endless elongated track belt body is provided with through holes.

Other objects, advantages and features of the present invention will become more apparent upon reading of the following non-restrictive description of embodiments thereof, given by way of example only with reference to the accompanying drawings.

BRIEF DESCRIPTION OF THE DRAWINGS

In the appended drawings:

FIG. **1**, labelled "Prior Art", is a perspective view of a snowmobile as known in the art;

FIG. **2**(A), labelled "Prior Art", is a schematic diagram of an assembly as known in the art;

FIG. **2**(B) is a is a schematic diagram of an assembly according to an embodiment of the present invention;

FIG. **2**(C) is a is a schematic diagram of an assembly according to a further embodiment of the present invention

FIG. **3**(A) and FIG. **3**(B) show a noise frequency spectra of an assembly as known in the art (dotted lines) and a noise frequency spectrum a vehicle of an assembly according to an embodiment of the present invention (full lines);

FIG. **4** shows a partial view of an endless track according to a further embodiment of the present invention;

FIG. **5** shows schematically a distribution of holes in an endless track according to an embodiment of the present invention; and

FIG. **6** illustrates results of sound produced by a tracked vehicle, when the track belt contains holes located in the center portion of the track belt (squares); when the track belt contains holes located both in the center and in the lateral portions of the track belt (triangles); and when the track belt is devoid of holes (diamonds).

DESCRIPTION OF EMBODIMENTS OF THE INVENTION

Tests performed on a variety of such conventional assemblies as illustrated in FIG. **2**(A) show that the noise generated

at the level of the guide wheels **10** is highly dependent on a positioning thereof. It is found that guide wheels located in a rear region (R) or in a region of the assembly adjacent this rear region are a main source of noise. A zone situated in a forward region (F) of the assembly is found to be a silent region.

An assembly according to the present invention is provided with guide wheels located only in the forward region (F) of the assembly, the rear region (R) being devoid of guide wheels (see FIGS. **2**(A) and **2**(B)).

As illustrated in FIG. **2**(B), guide wheels **14** may be located in aligned pairs **14***a*-**14***b;* **14***c*-**14***d;* and **14***e*-**14***f,* in the forward region (F) of the assembly, the rear region (R) being devoid of guide wheels, in such a way that a first group of guide wheels **14***e*-**14***f* is located close to an extremity of the rails **12** where the rails **12** are bent, in the forward region (F) of the assembly.

As illustrated in FIG. **2**(C), the guide wheels **16** may be located in non-aligned pairs **16***a*-**16***b;* **16***c*-**16***d;* and **16***e*-**16***f* in the forward region (F) of the assembly, the rear region (R) being devoid of guide wheels, in such a way that a first group of guide wheels **16***e*-**16***f* is located close to region where the rails **12** are bent, in the forward region (F) of the assembly. Each guide wheel of a given pair is now in a staggered position with respect to its counterpart, which contributes to cancel simultaneous occurrences of impacts.

Along the guide rails **12**, the guide wheels are laterally separated by a distance less than a distance separating two successive profiles of the track so as to avoid producing a simultaneity of impacts, and less than the pitch of the track so as to allow a sufficient time of impact between the guide wheels and the reinforcing rods.

It is found that the staggered position of the guide wheels as illustrated in FIG. **2**(C) is all the more efficient in the noise-reduction as it is applied to the pairs **16***c*-**16***d,* **16***e*-**16***f* close to a point of attachment of the assembly (see FIG. **2**C).

Moreover, the guide wheels may be mounted inside or outside the guide rails **12**. It is found that such a position relative to the guide rails, when the guide wheels are located in the forward region (F) of the assembly, does not affect the noise generated. However, when the guide wheels are located further away from the forward region (F) of the assembly, either in the center region or in the rear region (R) thereof, a mounting of the guide wheels in between the guide rails **12** results in an increased production of noise.

As may be seen in FIG. **3**(A), such an assembly as illustrated in FIG. **2**(C) allows an overall noise reduction of up to 5 dB (A), and a reduction of up to 9 dB (A) of the main peak of the frequency spectrum (compare the spectrum measured with the present assembly comprising guide wheels in a forward position (F), the rear region (R) being devoid of guide wheels, in full line, with a spectrum measured with a conventional assembly as used in the art, in dotted line).

The assembly may further be improved by mounting clips in each profile of the ground-engaging surface of the track (not shown). As may be seen in FIG. **3**(B), such an assembly is characterised by an overall noise attenuation of up to 7 dB (A), as well as by a decreasing effect on harmonics of the drive frequency of the track (compare the spectrum measured with the present improved assembly comprising clips in each profile in dotted line, with a spectrum measured with a conventional assembly comprising clips in each profile as used in the art, in full line).

It is further shown that providing the belt with apertures such as punch holes in between the profiles also reduces the sound level.

In FIG. **4**, apertures **200** are provided on any part across the width of the endless body **100**, on the central region (C) of the track **100**, defined between the openings **190** for the driving wheels, and/or on the lateral parts (L) of the endless body **100**, between traction lugs **120** of the ground engaging surface **110**. Thus, in this embodiment, each of the apertures **200** occupies a part of the width of the track **100** which is other than any part of the width of the track **100** which is engaged by a driving wheel when the track **100** is driven. As such, in this embodiment, each aperture **200** is located such that no drive wheel tooth is received in that aperture when the track **100** is in motion.

Such openings **200** are distributed along the length of the endless body **100**, between two traction lugs **120**, or two reinforcing rods (not shown) if any, with at least one opening per quarter (¼) of the total length (**1**) of the endless body **110**, as shown in FIG. **5**. For example, in the embodiment shown in FIG. **4**, a first through hole **200** is located longitudinally between a first traction lug **120** and a second traction lug **120** which succeeds the first traction lug **120** along the length of the track **100**, a second through hole **200** is located longitudinally between the second traction lug **120** and a third traction lug **120** which succeeds the second traction lug **120** along the length of the track **100**, and a third through hole **200** is located longitudinally between the third traction lug **120** and a fourth traction lug **120** which succeeds the third traction lug **120** along the length of the track **100**. In this example, the first, second and third through holes **200** are located in the central portion (C) of the track **100**. Also, in this example, the first, second and third through holes **200** are laterally offset from one another, with the centermost one of these holes **200** extending across a centerline which bisects the width of the track **100**.

FIG. **6** illustrates results of sound produced by a tracked vehicle, according to a number of holes in its track belt. As can be seen, the sound level in dB is reduced when the track belt contains holes located in the center portion of the track belt (squares), and even more so when the track belt contains holes located both in the center and in the lateral portions of the track belt (triangles), compared to the case when the track belt is devoid of holes (diamonds), at least up to a speed of the vehicle of about 70 miles per hour, the three belts being otherwise identical. For instance, in this example, when the track contains holes, either only in its center portion or both in its center portion and its lateral portions, the noise level produced by the vehicle is less than that which is produced when the track lacks these holes, as the vehicle is operated at speeds between 20 miles per hour and 60 miles per hour, including between 40 miles per hour and 60 miles per hour where the reduction in noise level becomes greater. In particular, in this example, when the track contains holes, either only in its center portion or both in its center portion and its lateral portions, the noise level produced by the vehicle is at least 1.5 decibels less than that which is produced when the track lacks these holes, as the vehicle is operated at speeds between 50 miles per hour and60 miles per hour.

Even a small number of through holes is found to reduce the noise level of the track, such as, for example, 96 through holes of a diameter of 1 inch on a belt of 15 inches wide, 121 inches long, which represent 0.28% of total area of the holes relative to the total area of the belt.

It could be contemplated removing the belt portions in between the traction lugs altogether, for a maximised decrease of noise production.

The shape of the holes does not matter, as far as the endless body of the track is removed at places and the track thereby provided with though holes, open from the ground-engaging surface to the inner surface of the endless belt body. For example, in the embodiment shown in FIG. **4**, each of the

holes **200** has a generally rectangular shape. Also, in this embodiment, each of the holes is elongated along the width of the track **100**, i.e., it is longer along the width of the track **100** than along the length of the track **100**.

A track assembly of the present invention may combine a forward position of the guide wheels as described earlier hereinabove, with an endless track body provided with open holes, as just described, for an increased reduction of noise production.

Interestingly, people in the art will appreciate that with such a forward position of the guide wheels further contributes to reducing and preventing wear out of the guide rails, which is known to occur especially in a front region.

Therefore, there is provided a track assembly comprising guide wheels in a region of greatest impacts on the guide rails of the track, which are also the regions of greater wear out of the guide rails, the guide wheels being further arranged in a staggered position.

The track assembly may further comprise clips mounted in each profile of the ground-engaging surface of the track, which results in a larger distance between the track and the guide wheels, thereby reducing a force of impact during contacts between rods and wheels.

Although the present invention has been described hereinabove by way of embodiments thereof, it may be modified, without departing from the nature and teachings of the subject invention as described herein.

What is claimed is:

1. An endless snowmobile track for traction of a snowmobile, the snowmobile comprising a plurality of drive wheels for imparting motion to the endless snowmobile track, the endless snowmobile track comprising:

an inner side for facing the drive wheels;

a ground-engaging outer side for engaging the ground;

a central portion for passing between a first one of the drive wheels and a second one of the drive wheels; and

a plurality of noise-reducing through holes distributed along the endless snowmobile track for reducing noise generated when the endless snowmobile track is in motion, each noise-reducing through hole:

extending through the endless snowmobile track from the inner side to the ground-engaging outer side; and

being located such that no drive wheel tooth is received in the noise-reducing through hole when the endless snowmobile track is in motion;

at least one of the noise-reducing through holes being located in the central portion of the endless snowmobile track;

wherein, when the snowmobile is operated in a range of speeds, a noise level produced is less than that which would be produced if the endless snowmobile track lacked the noise-reducing through holes, but was otherwise identical.

2. The endless snowmobile track as claimed in claim **1**, the range of speeds including speeds from 40 miles per hour to 60 miles per hour.

3. The endless snowmobile track as claimed in claim **1**, the noise level produced when the snowmobile is operated between 50 miles per hour and 60 miles per hour being at least 1.5 decibels less than that which would be produced if the endless snowmobile track lacked the noise-reducing through holes but was otherwise identical.

4. The endless snowmobile track as claimed in claim **1**, wherein there is at least one of the noise-reducing through holes per quarter of a length of the endless snowmobile track.

5. The endless snowmobile track as claimed in claim **1**, wherein the noise-reducing through holes collectively occupy an area corresponding to 0.28% of a total area of the endless snowmobile track.

6. The endless snowmobile track as claimed in claim **1**, comprising a plurality of traction profiles projecting from the ground-engaging outer side, the traction profiles being spaced apart along a longitudinal direction of the endless snowmobile track and including a first traction profile, a second traction profile succeeding the first traction profile along the longitudinal direction of the endless snowmobile track, and a third traction profile succeeding the second traction profile along the longitudinal direction of the endless snowmobile track, the noise-reducing through holes including a first noise-reducing through hole located longitudinally between the first traction profile and the second traction profile and a second noise-reducing through hole located longitudinally between the second traction profile and the third traction profile.

7. The endless snowmobile track as claimed in claim **6**, each of the first noise-reducing through hole and the second noise-reducing through hole being located in the central portion of the endless snowmobile track.

8. The endless snowmobile track as claimed in claim **6**, the traction profiles including a fourth traction profile succeeding the third traction profile along the longitudinal direction of the endless snowmobile track, the noise-reducing through holes including a third noise-reducing through hole located longitudinally between the third traction profile and the fourth traction profile.

9. The endless snowmobile track as claimed in claim **8**, each of the first noise-reducing through hole, the second noise-reducing through hole and the third noise-reducing through hole being located in the central portion of the endless snowmobile track.

10. The endless snowmobile track as claimed in claim **1**, the endless snowmobile track comprising:

a first lateral edge and a second lateral edge opposite one another;

a first lateral portion between the central portion and the first lateral edge; and

a second lateral portion between the central portion and the second lateral edge;

at least one of the noise-reducing through holes being located in one of the first lateral portion and the second lateral portion of the endless snowmobile track.

11. The endless snowmobile track as claimed in claim **1**, each noise-reducing through hole being a punched hole.

12. The endless snowmobile track as claimed in claim **1**, the endless snowmobile track having a length, a ratio of the number of noise-reducing through holes to the length of the endless snowmobile track being at least 0.8 noise-reducing hole per inch.

13. The endless snowmobile track as claimed in claim **1**, at least some of the noise-reducing through holes having a generally rectangular shape.

14. The endless snowmobile track as claimed in claim **1**, at least some of the noise-reducing through holes having a width that is at least 1/15 of a width of the endless snowmobile track.

15. The endless snowmobile track as claimed in claim **1**, comprising a plurality of openings for the drive wheels, the openings being arranged in a first row and a second row that are spaced apart from one another along a width of the endless snowmobile track.

16. A snowmobile comprising the endless snowmobile track as claimed in claim **1**.

17. The endless snowmobile track as claimed in claim **1**, wherein individual ones of the noise-reducing through holes are located in the central portion of the endless snowmobile track.

18. The endless snowmobile track as claimed in claim **1**, the endless snowmobile track having a centerline bisecting a width of the endless snowmobile track, at least one of the noise-reducing through holes extending across the centerline of the endless snowmobile track.

19. The endless snowmobile track as claimed in claim **1**, at least some of the noise-reducing through holes being elongated along a width of the endless snowmobile track.

20. An endless snowmobile track for traction of a snowmobile, the snowmobile comprising at least one drive wheel for driving the endless snowmobile track, the endless snowmobile track having a length and a width and comprising:

an inner side for facing the at least one drive wheel;

a ground-engaging outer side for engaging the ground; and

a plurality of noise-reducing through holes distributed along the endless snowmobile track for reducing noise generated when the endless snowmobile track is driven, each noise-reducing through hole:

extending through the endless snowmobile track from the inner side to the ground-engaging outer side; and

occupying a part of the width of the endless snowmobile track which is other than any part of the width of the endless snowmobile track which is engaged by a drive wheel when the endless snowmobile track is driven;

wherein, when the snowmobile is operated in a range of speeds, a noise level produced is less than that which would be produced if the endless snowmobile track lacked the noise-reducing through holes, but was otherwise identical.

21. The endless snowmobile track as claimed in claim **20**, the range of speeds including speeds from 50 miles per hour to 60 miles per hour.

22. The endless snowmobile track as claimed in claim **20**, the range of speeds including speeds from 40 miles per hour to 60 miles per hour.

23. The endless snowmobile track as claimed in claim **20**, the range of speeds including speeds from 20 miles per hour to 60 miles per hour.

24. The endless snowmobile track as claimed in claim **20**, the noise level produced when the snowmobile is operated between 50 miles per hour and 60 miles per hour being at least 1.5 decibels less than that which would be produced if the endless snowmobile track lacked the noise-reducing through holes but was otherwise identical.

25. The endless snowmobile track as claimed in claim **20**, wherein there is at least one of the noise-reducing through holes per quarter of the length of the endless snowmobile track.

26. The endless snowmobile track as claimed in claim **20**, wherein the noise-reducing through holes collectively occupy an area corresponding to 0.28% of a total area of the endless snowmobile track.

27. The endless snowmobile track as claimed in claim **20**, the at least one drive wheel being a plurality of drive wheels, the endless snowmobile track comprising a central portion for passing between a first one of the drive wheels and a second one of the drive wheels, the first one of the drive wheels and the second one of the drive wheels being spaced apart from one another along the width of the endless snowmobile track, at least one of the noise-reducing through holes being located in the central portion of the endless snowmobile track.

28. The endless snowmobile track as claimed in claim **27**, the endless snowmobile track comprising:

a first lateral edge and a second lateral edge opposite one another;

a first lateral portion between the central portion and the first lateral edge; and

a second lateral portion between the central portion and the second lateral edge;

at least one of the noise-reducing through holes being located in one of the first lateral portion and the second lateral portion of the endless snowmobile track.

29. The endless snowmobile track as claimed in claim **27**, wherein individual ones of the noise-reducing through holes are located in the central portion of the endless snowmobile track.

30. The endless snowmobile track as claimed in claim **20**, comprising a plurality of traction profiles projecting from the ground-engaging outer side, the traction profiles being spaced apart along the length of the endless snowmobile track and including a first traction profile, a second traction profile succeeding the first traction profile along the length of the endless snowmobile track, and a third traction profile succeeding the second traction profile along the length of the endless snowmobile track, the noise-reducing through holes including a first noise-reducing through hole located longitudinally between the first traction profile and the second traction profile and a second noise-reducing through hole located longitudinally between the second traction profile and the third traction profile.

31. The endless snowmobile track as claimed in claim **30**, the at least one drive wheel being a plurality of drive wheels, the endless snowmobile track comprising a central portion for passing between a first one of the drive wheels and a second one of the drive wheels, the first one of the drive wheels and the second one of the drive wheels being spaced apart from one another along the width of the endless snowmobile track, each of the first noise-reducing through hole and the second noise-reducing through hole being located in the central portion of the endless snowmobile track.

32. The endless snowmobile track as claimed in claim **30**, the traction profiles including a fourth traction profile succeeding the third traction profile along the length of the endless snowmobile track, the noise-reducing through holes including a third noise-reducing through hole located longitudinally between the third traction profile and the fourth traction profile.

33. The endless snowmobile track as claimed in claim **32**, the at least one drive wheel being a plurality of drive wheels, the endless snowmobile track comprising a central portion for passing between a first one of the drive wheels and a second one of the drive wheels, the first one of the drive wheels and the second one of the drive wheels being spaced apart from one another along the width of the endless snowmobile track, each of the first noise-reducing through hole, the second noise-reducing through hole and the third noise-reducing through hole being located in the central portion of the endless snowmobile track.

34. The endless snowmobile track as claimed in claim **20**, each noise-reducing through hole being a punched hole.

35. The endless snowmobile track as claimed in claim **20**, a ratio of the number of noise-reducing through holes to the length of the endless snowmobile track being at least 0.8 noise-reducing hole per inch.

36. The endless snowmobile track as claimed in claim **20**, at least some of the noise-reducing through holes having a generally rectangular shape.

37. The endless snowmobile track as claimed in claim **20**, at least some of the noise-reducing through holes having a width that is at least 1/15 of the width of the endless snowmobile track.

38. The endless snowmobile track as claimed in claim **20**, the at least one drive wheel being a plurality of drive wheels, the endless snowmobile track comprising a plurality of openings for the drive wheels, the openings being arranged in a first row and a second row that are spaced apart from one another along the width of the endless snowmobile track.

39. The endless snowmobile track as claimed in claim **20**, the endless snowmobile track having a centerline bisecting the width of the endless snowmobile track, at least one of the noise-reducing through holes extending across the centerline of the endless snowmobile track.

40. The endless snowmobile track as claimed in claim **20**, at least some of the noise-reducing through holes being elongated along the width of the endless snowmobile track.

41. A snowmobile comprising the endless snowmobile track as claimed in claim **20**.

42. An endless snowmobile track for traction of a snowmobile, the snowmobile comprising a plurality of drive wheels for driving the endless snowmobile track, the endless snowmobile track having a length and a width and comprising:

an inner side for facing the drive wheels;

a ground-engaging outer side for engaging the ground;

a first row of openings that extend through the endless snowmobile track from the inner side to the ground-engaging outer side;

a second row of openings that extend through the endless snowmobile track from the inner side to the ground-engaging outer side, the second row of openings being spaced apart from the first row of openings along the width of the endless snowmobile track;

a central portion between the first row of openings and the second row of openings; and

a plurality of noise-reducing through holes distributed along the endless snowmobile track for reducing noise generated when the endless snowmobile track is driven, each noise-reducing through hole:

extending through the endless snowmobile track from the inner side to the ground-engaging outer side; and

occupying a part of the width of the endless snowmobile track which is other than any part of the width of the endless snowmobile track which is engaged by a drive wheel when the endless snowmobile track is driven;

at least one of the noise-reducing through holes being located in the central portion of the endless snowmobile track

wherein, when the snowmobile is operated in a range of speeds, a noise level produced is less than that which would be produced if the endless snowmobile track lacked the noise-reducing through holes, but was otherwise identical.

43. The endless snowmobile track as claimed in claim **42**, the range of speeds including speeds from 50 miles per hour to 60 miles per hour.

44. The endless snowmobile track as claimed in claim **42**, the range of speeds including speeds from 40 miles per hour to 60 miles per hour.

45. The endless snowmobile track as claimed in claim **42**, the range of speeds including speeds from 20 miles per hour to 60 miles per hour.

46. The endless snowmobile track as claimed in claim **42**, the noise level produced when the snowmobile is operated between 50 miles per hour and 60 miles per hour being at least 1.5 decibels less than that which would be produced if the endless snowmobile track lacked the noise-reducing through holes but was otherwise identical.

47. The endless snowmobile track as claimed in claim **42**, comprising a plurality of traction profiles projecting from the ground-engaging outer side, the traction profiles being spaced apart along the length of the endless snowmobile track and including a first traction profile, a second traction profile succeeding the first traction profile along the length of the endless snowmobile track, and a third traction profile succeeding the second traction profile along the length of the endless snowmobile track, the noise-reducing through holes including a first noise-reducing through hole located longitudinally between the first traction profile and the second traction profile and a second noise-reducing through hole located longitudinally between the second traction profile and the third traction profile.

48. The endless snowmobile track as claimed in claim **47**, each of the first noise-reducing through hole and the second noise-reducing through hole being located in the central portion of the endless snowmobile track.

49. The endless snowmobile track as claimed in claim **47**, the traction profiles including a fourth traction profile succeeding the third traction profile along the length of the endless snowmobile track, the noise-reducing through holes including a third noise-reducing through hole located longitudinally between the third traction profile and the fourth traction profile.

50. The endless snowmobile track as claimed in claim **49**, each of the first noise-reducing through hole, the second noise-reducing through hole and the third noise-reducing through hole being located in the central portion of the endless snowmobile track.

51. The endless snowmobile track as claimed in claim **42**, a ratio of the number of noise-reducing through holes to the length of the endless snowmobile track being at least 0.8 noise-reducing hole per inch.

52. The endless snowmobile track as claimed in claim **42**, at least some of the noise-reducing through holes having a width that is at least 1/15 of the width of the endless snowmobile track.

53. The endless snowmobile track as claimed in claim **42**, wherein individual ones of the noise-reducing through holes are located in the central portion of the endless snowmobile track.

54. A snowmobile comprising the endless snowmobile track as claimed in claim **42**.

* * * * *