US007975794B2

(12) **United States Patent**
Simmons

(10) **Patent No.: US 7,975,794 B2**
(45) **Date of Patent: Jul. 12, 2011**

(54) **SUSPENSION FOR TRACKED VEHICLES**

(75) Inventor: **Val J. Simmons**, Providence, UT (US)

(73) Assignee: **Simmons, Inc.**, Providence, UT (US)

(*) Notice: Subject to any disclaimer, the term of this patent is extended or adjusted under 35 U.S.C. 154(b) by 9 days.

(21) Appl. No.: **12/468,852**

(22) Filed: **May 19, 2009**

(65) **Prior Publication Data**

US 2009/0321167 A1 Dec. 31, 2009

Related U.S. Application Data

(63) Continuation-in-part of application No. 11/540,339, filed on Sep. 28, 2006, now Pat. No. 7,533,750.

(60) Provisional application No. 60/721,296, filed on Sep. 28, 2005.

(51) **Int. Cl.**
B62M 27/02 (2006.01)

(52) **U.S. Cl.** **180/193**; 180/9.5; 305/120

(58) **Field of Classification Search** 180/193, 180/9.5; 305/120, 127, 128, 141
See application file for complete search history.

(56) **References Cited**

U.S. PATENT DOCUMENTS

3,111,349 A 11/1963 Tucker, Sr.
3,527,506 A 9/1970 Erickson
3,613,811 A 10/1971 Brandli
3,721,308 A 3/1973 Brandli et al.
3,773,126 A 11/1973 Irvine
3,784,263 A 1/1974 Hendrickson et al.
3,788,412 A 1/1974 Vincent
3,800,897 A 4/1974 Irvine
3,856,099 A 12/1974 Bowers
3,863,727 A 2/1975 Michrina
3,913,694 A 10/1975 Forsgren
3,922,024 A 11/1975 Burkhardt et al.
3,931,861 A 1/1976 Olson
3,933,213 A 1/1976 Trowbridge
3,945,451 A 3/1976 Aaen
3,966,004 A 6/1976 Rose
3,966,181 A 6/1976 Lessard
3,967,692 A 7/1976 Hoffman
3,974,890 A 8/1976 Noble
4,034,820 A 7/1977 Barnhardt
4,082,155 A 4/1978 McCartney
4,093,033 A * 6/1978 Rosch 180/9.56
4,133,400 A 1/1979 Shiraishi
4,217,006 A 8/1980 Dehnert
4,222,453 A 9/1980 Fixsen et al.
4,284,161 A 8/1981 Blass
4,301,884 A 11/1981 Taylor
4,305,476 A 12/1981 Blass et al.
4,314,618 A 2/1982 Tamura
4,328,878 A 5/1982 Yoshida
4,344,637 A 8/1982 Williams, Jr. et al.
4,393,953 A 7/1983 Boulianne
4,407,386 A 10/1983 Yasui et al.
4,431,078 A 2/1984 Ebert et al.
4,462,480 A 7/1984 Yasui et al.
(Continued)

Primary Examiner — Anne Marie M Boehler
Assistant Examiner — Tashiana Adams
(74) *Attorney, Agent, or Firm* — Briggs and Morgan, P.A.

(57) **ABSTRACT**

A suspension system for a tracked vehicle providing a wide range of performance characteristics via a user-adjustable overload spring assembly which engages a rear suspension element. An optimum spring force can depend on the both operator characteristics and local operating conditions. A user is afforded the ability to adjust a rear suspension system to provide desired ride characteristics. A suspension system including a movable stop to define a mechanical relation between a rear suspension arm and a front suspension arm is also disclosed.

17 Claims, 26 Drawing Sheets

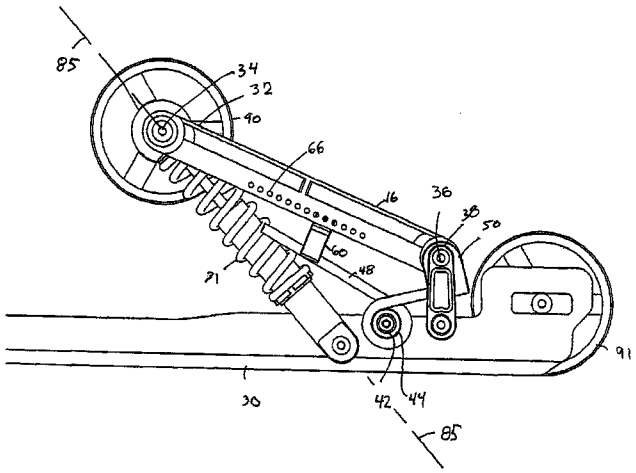

U.S. PATENT DOCUMENTS

4,518,056 A 5/1985 Kobayashi
4,544,170 A 10/1985 Ebert et al.
4,591,173 A 5/1986 Marier
4,633,964 A 1/1987 Boyer et al.
4,671,521 A 6/1987 Talbot et al.
4,892,164 A 1/1990 Yasui et al.
4,892,165 A 1/1990 Yasui et al.
4,917,207 A 4/1990 Yasui et al.
4,987,965 A 1/1991 Bourret
5,060,745 A 10/1991 Yasui et al.
5,104,205 A 4/1992 Motomura et al.
5,265,692 A 11/1993 Mallette
5,370,198 A * 12/1994 Karpik 180/193
5,474,146 A 12/1995 Yoshioka et al.
5,564,683 A 10/1996 Stuck
5,586,614 A 12/1996 Kouchi et al.
5,613,570 A 3/1997 Becker
5,660,245 A 8/1997 Marier et al.
5,667,031 A * 9/1997 Karpik 180/193
5,692,579 A 12/1997 Peppel et al.
5,727,643 A 3/1998 Kawano et al.
5,730,242 A 3/1998 Furusawa
5,791,429 A 8/1998 Bergman
5,881,834 A * 3/1999 Karpik 180/193
5,904,216 A 5/1999 Furusawa
5,904,217 A 5/1999 Yamamoto et al.
5,944,134 A 8/1999 Peppel et al.
5,947,220 A 9/1999 Oka et al.
6,032,752 A 3/2000 Karpik et al.
6,109,382 A 8/2000 Kubota
6,112,840 A 9/2000 Forbes
6,125,958 A 10/2000 Olson et al.
6,161,908 A 12/2000 Takayama et al.
6,170,589 B1 1/2001 Kawano et al.
6,206,124 B1 3/2001 Mallette et al.
6,234,264 B1 5/2001 Boivin et al.
6,253,867 B1 7/2001 Lillbacka
6,263,991 B1 7/2001 Savage et al.
6,283,241 B1 9/2001 Kubota
6,321,864 B1 11/2001 Forbes
6,354,391 B1 3/2002 Cormican
6,354,677 B1 3/2002 Cook et al.
6,357,543 B1 3/2002 Karpik
6,390,219 B1 * 5/2002 Vaisanen 180/193
6,401,852 B2 6/2002 Lillbacka
6,450,279 B1 * 9/2002 Imamura 180/193
6,450,280 B1 9/2002 Pepka et al.
6,460,646 B2 10/2002 Kanan
6,467,561 B1 10/2002 Boivin et al.
6,474,662 B1 11/2002 Cormican
6,478,098 B2 11/2002 Boivin et al.
6,494,548 B2 12/2002 Courtemanche
6,499,551 B2 12/2002 Karpik
RE38,124 E 5/2003 Mallette et al.
6,561,302 B2 5/2003 Karpik
6,595,309 B1 7/2003 Savage et al.
6,619,417 B2 * 9/2003 Lemieux 180/182
6,626,258 B1 9/2003 Forbes
6,761,236 B2 7/2004 Hibbert
6,796,395 B1 9/2004 Berg et al.
6,880,660 B1 4/2005 Berg et al.
6,926,108 B1 8/2005 Polakowski et al.
6,991,057 B2 1/2006 Imamura et al.
7,014,004 B2 3/2006 Etou
7,040,426 B1 5/2006 Berg
7,040,438 B2 5/2006 Yoshihara
7,070,012 B2 * 7/2006 Fecteau 180/9.5
7,128,180 B2 10/2006 Polakowski et al.
7,147,074 B1 12/2006 Berg et al.
2001/0027887 A1 10/2001 Lillbacka et al.
2001/0030467 A1 10/2001 Courtemanche
2002/0033290 A1 3/2002 Vaisanen
2002/0053477 A1 5/2002 Karpik
2002/0060102 A1 5/2002 Boivin et al.
2002/0185829 A1 12/2002 Cormican
2005/0016784 A1 1/2005 Fecteau
2005/0023060 A1 2/2005 Blanchard
2005/0183899 A1 8/2005 Polakowski et al.
2005/0199433 A1 9/2005 Abe et al.
2005/0274559 A1 12/2005 Lillbaka et al.
2006/0169510 A1 8/2006 Visscher
2006/0180370 A1 8/2006 Polakowski et al.
2006/0185919 A1 8/2006 Hibbert et al.
2006/0261671 A1 11/2006 Lemme

* cited by examiner

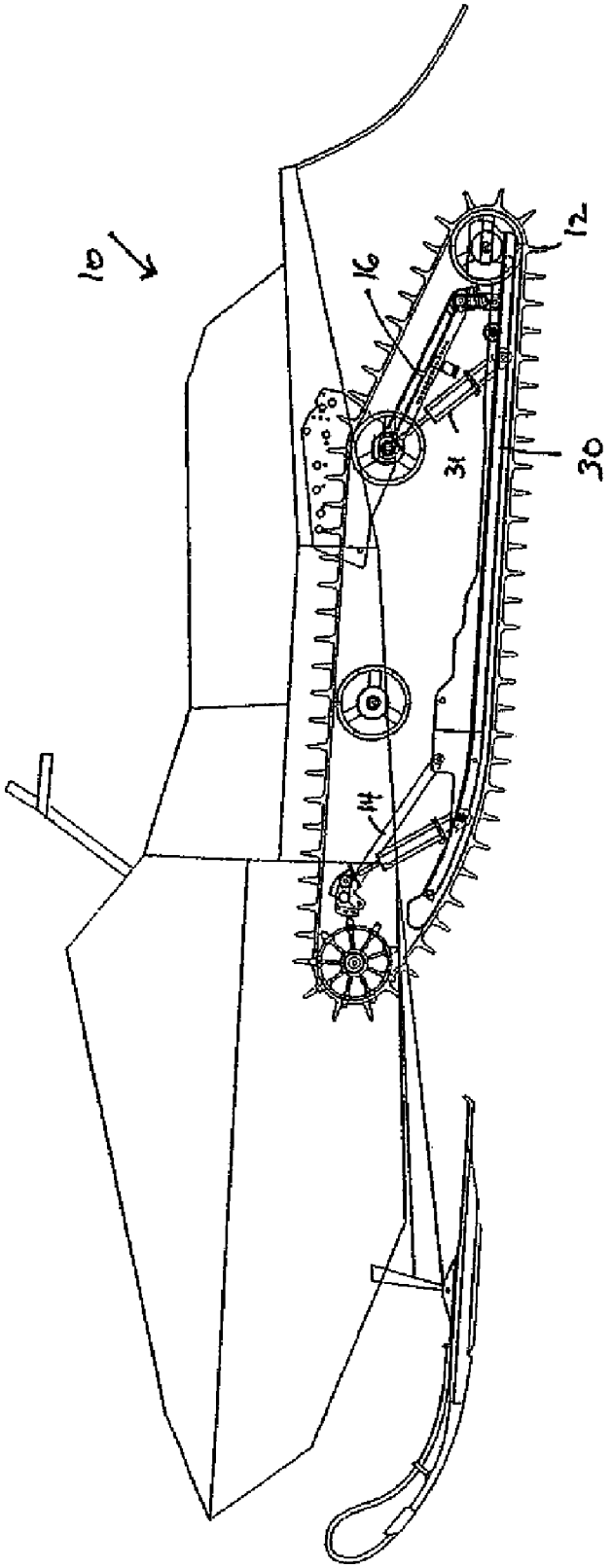

FIG. 1

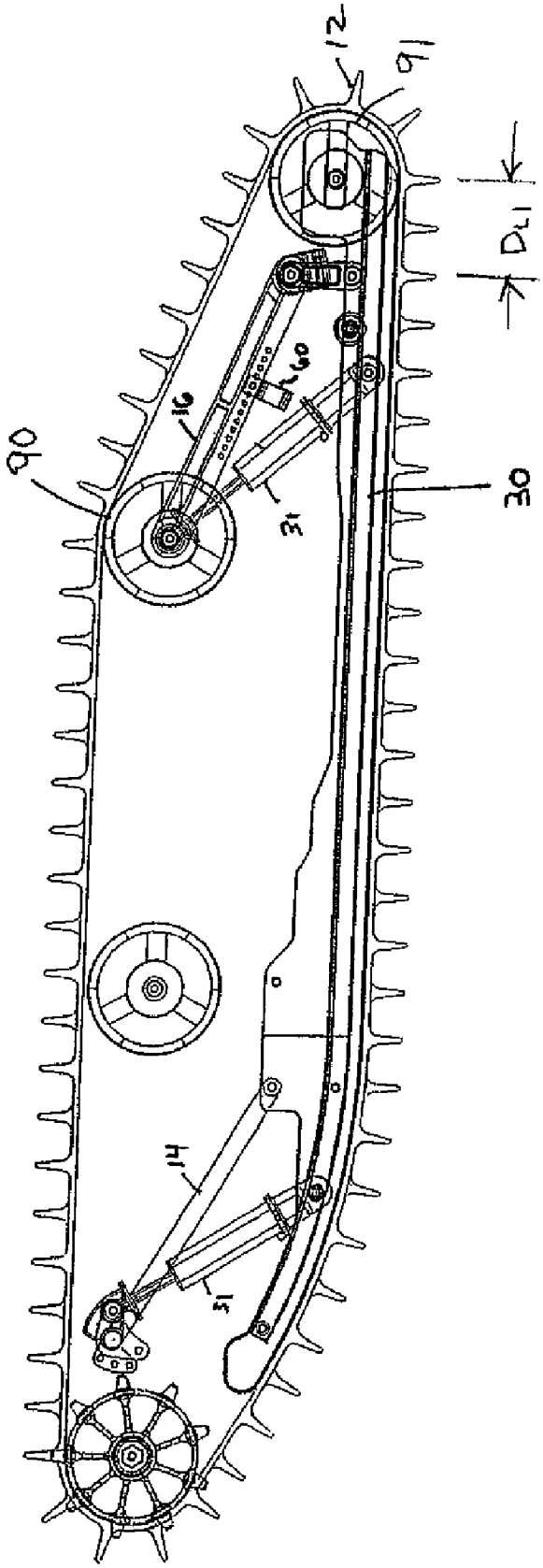

FIG. 2

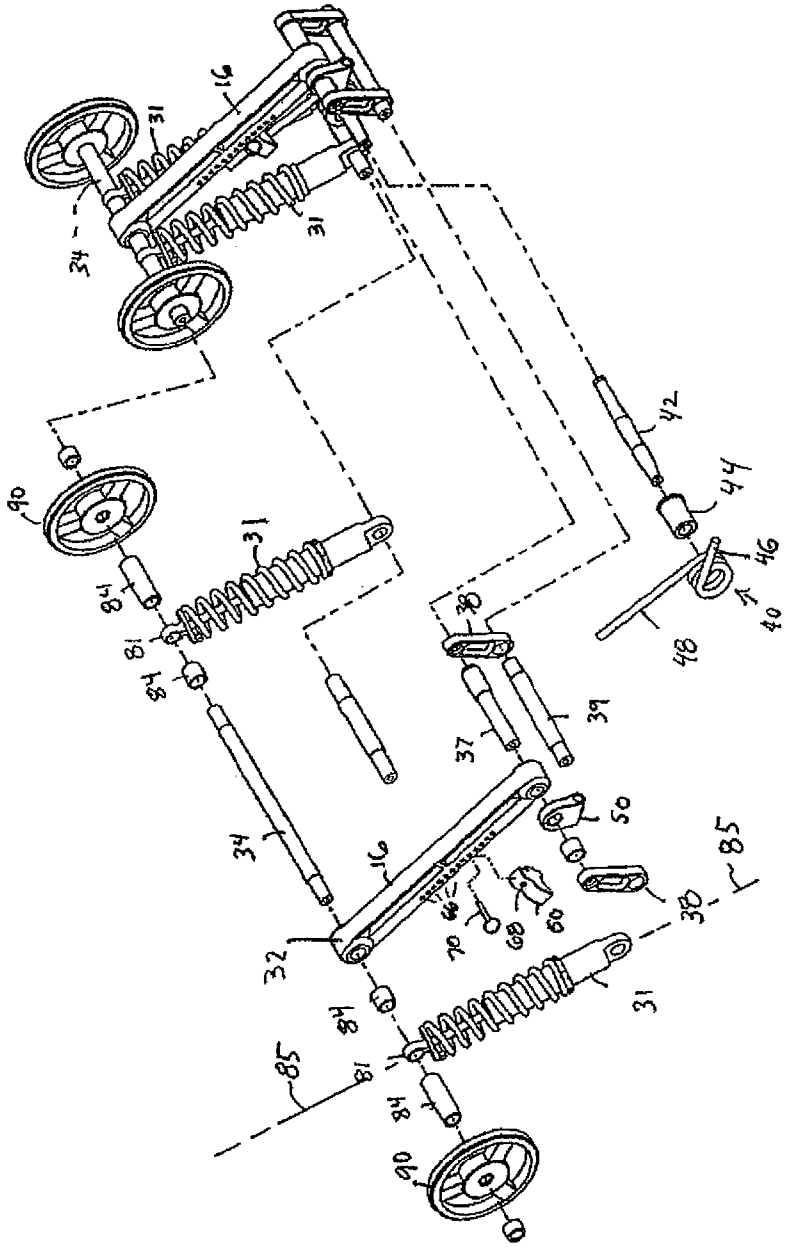
16
31
34
31
42
44
46
40
48
90
84
81
84
31
38
39
37
34
16
50
85
38
32
66
70
68
60
31
84
81
85
84
90

FIG. 3

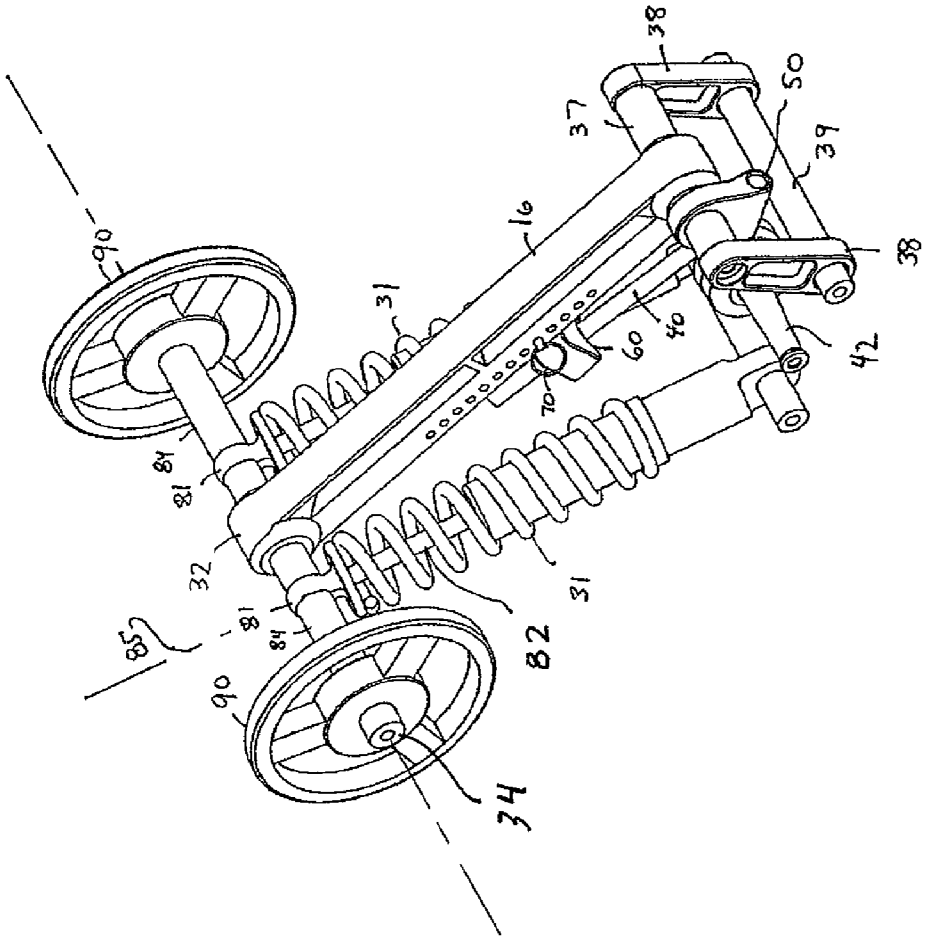

FIG. 4

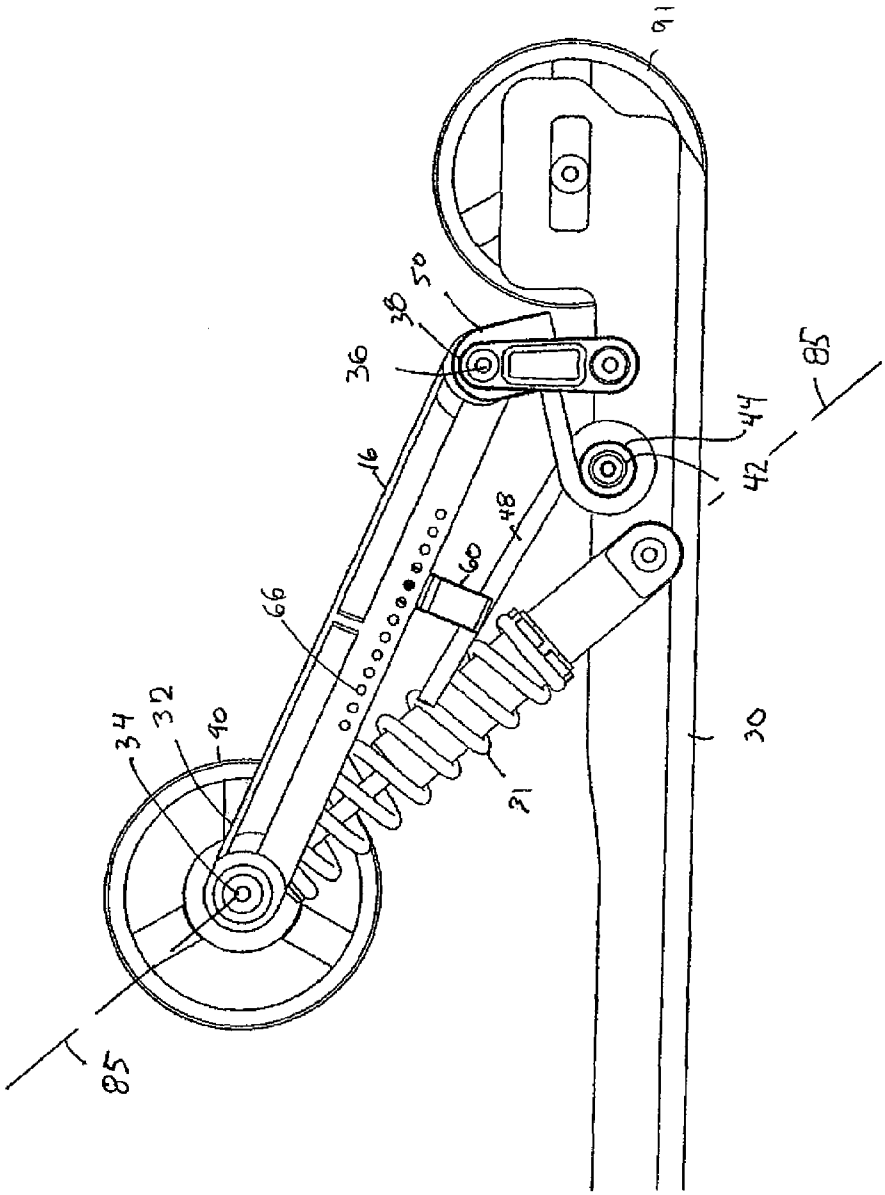

FIG. 5

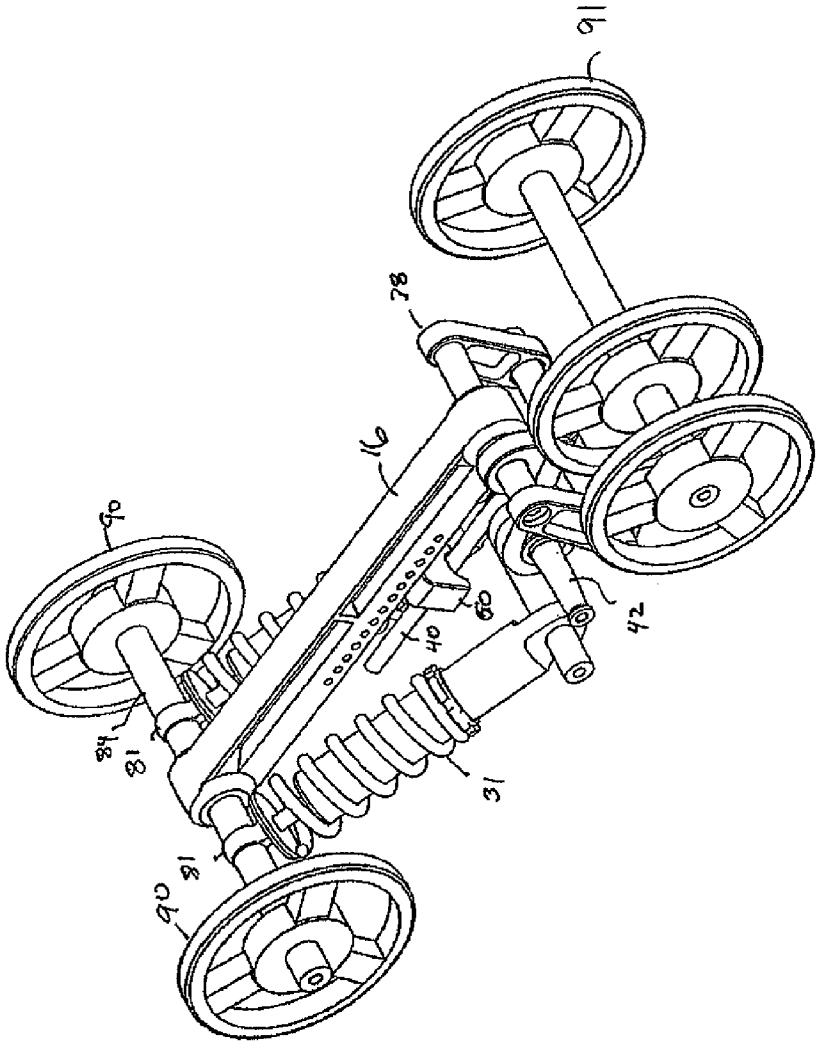

FIG. 6

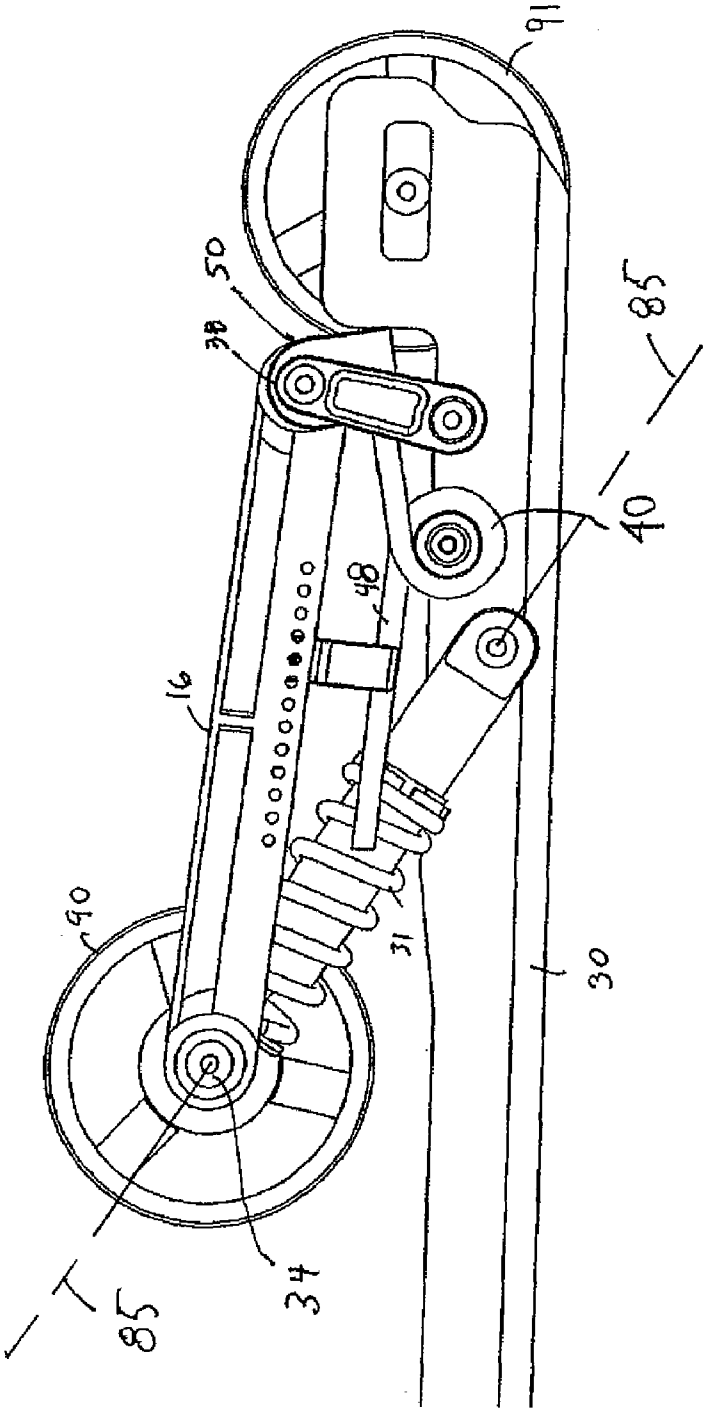

FIG. 7

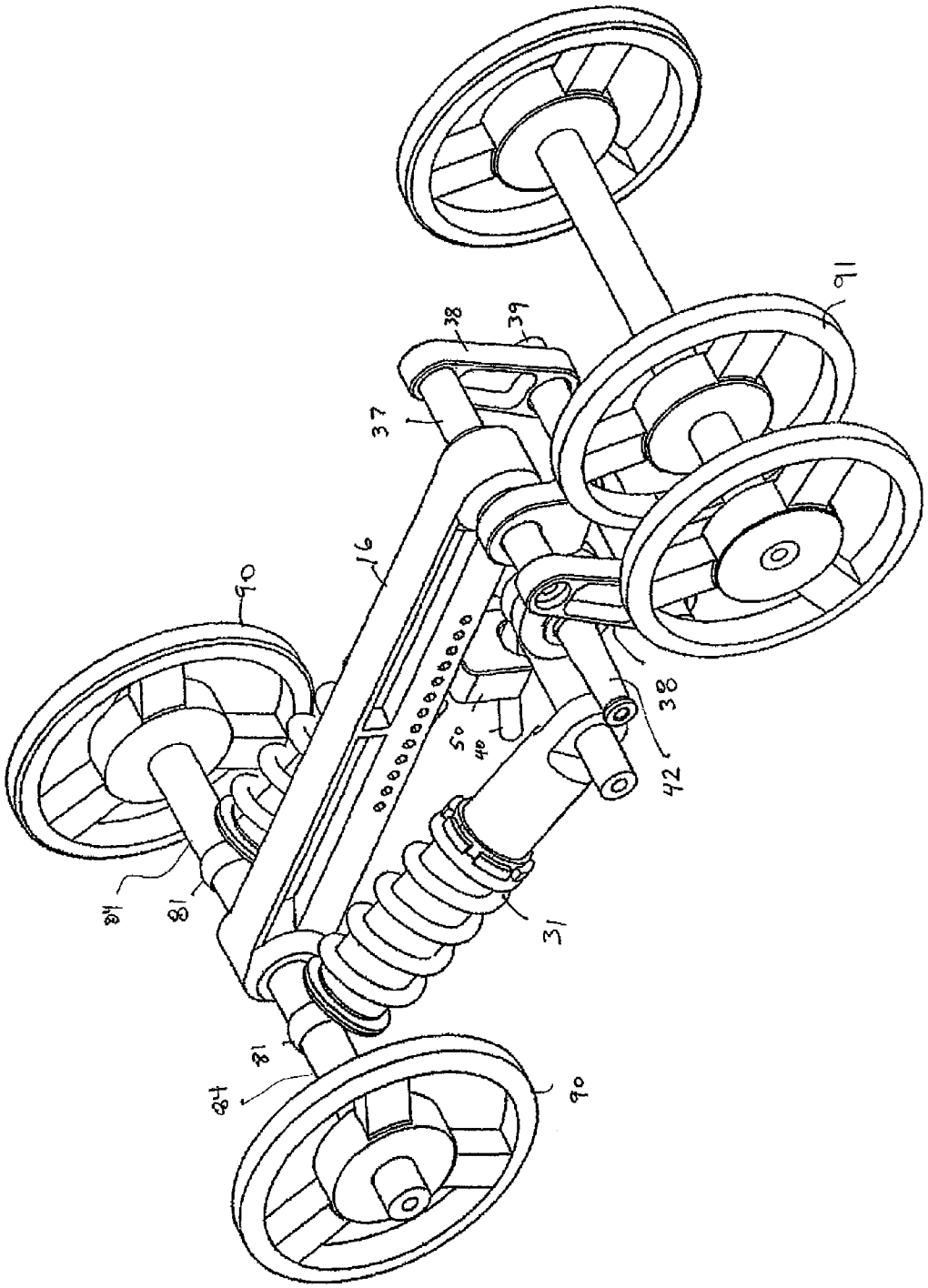

FIG. 8

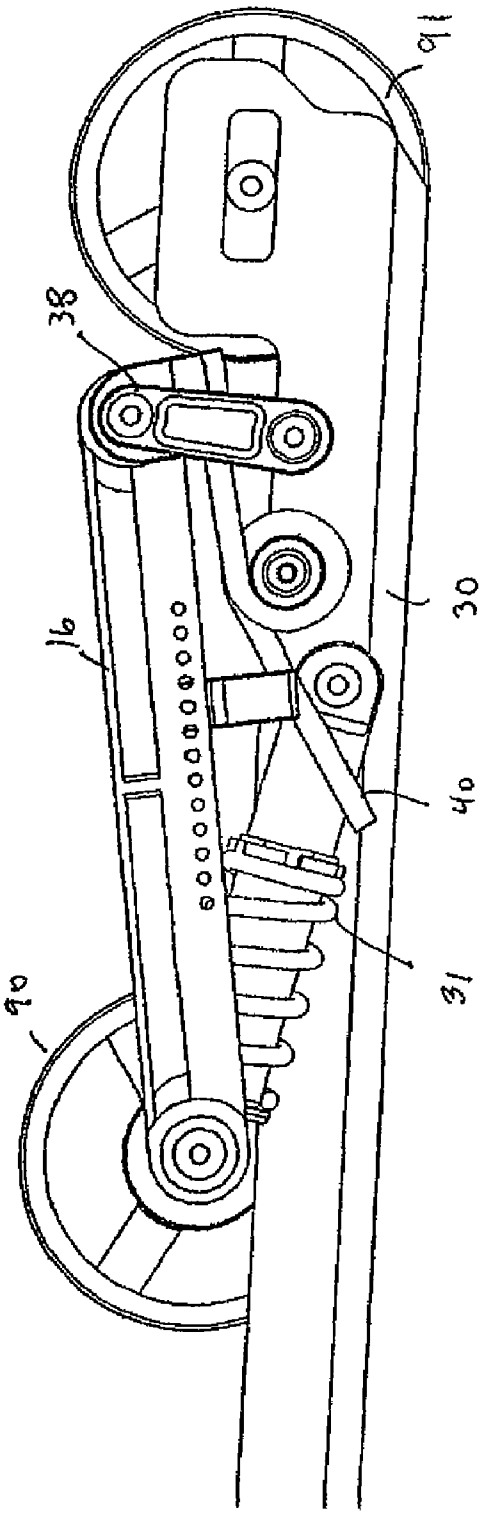

FIG. 9

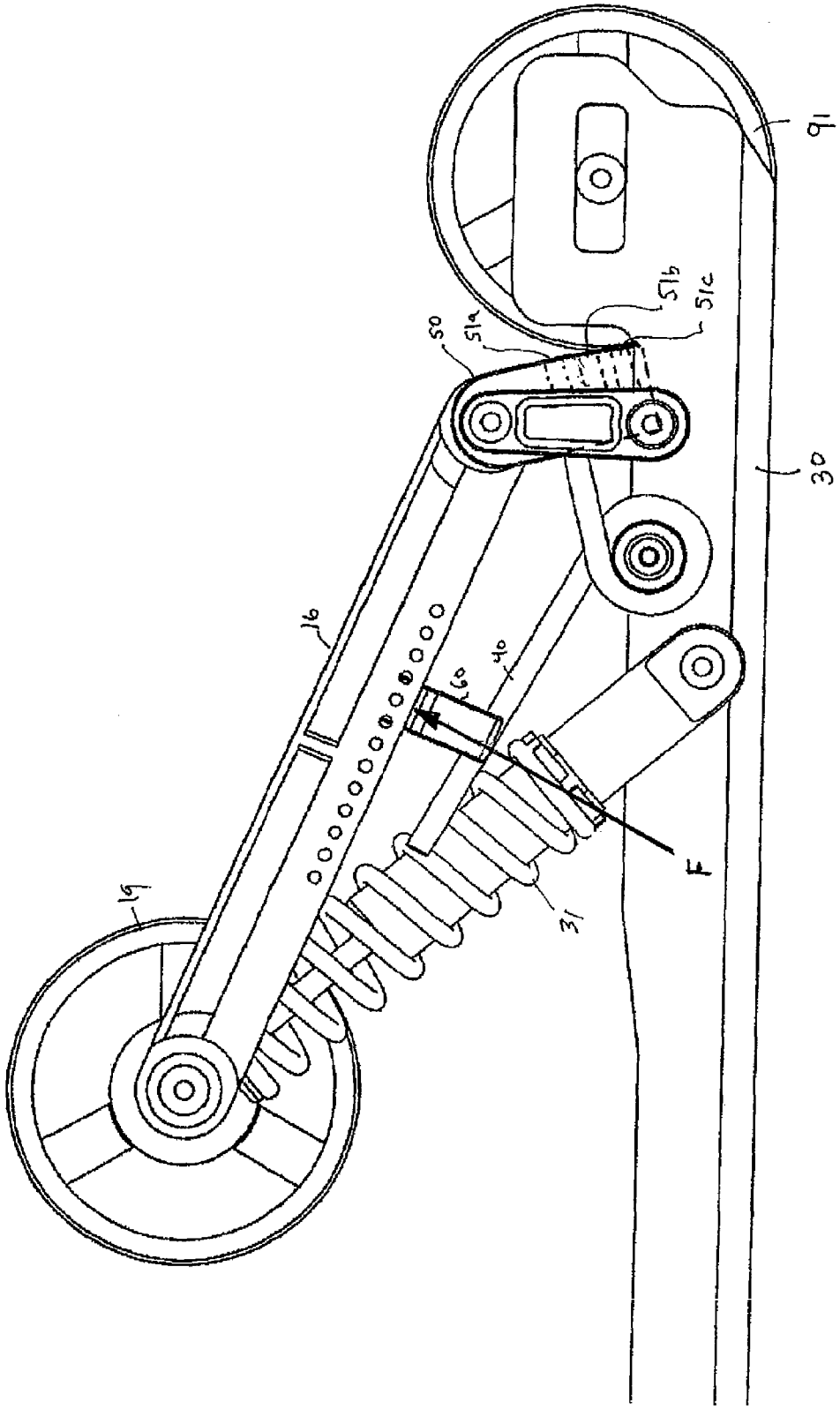

FIG. 10

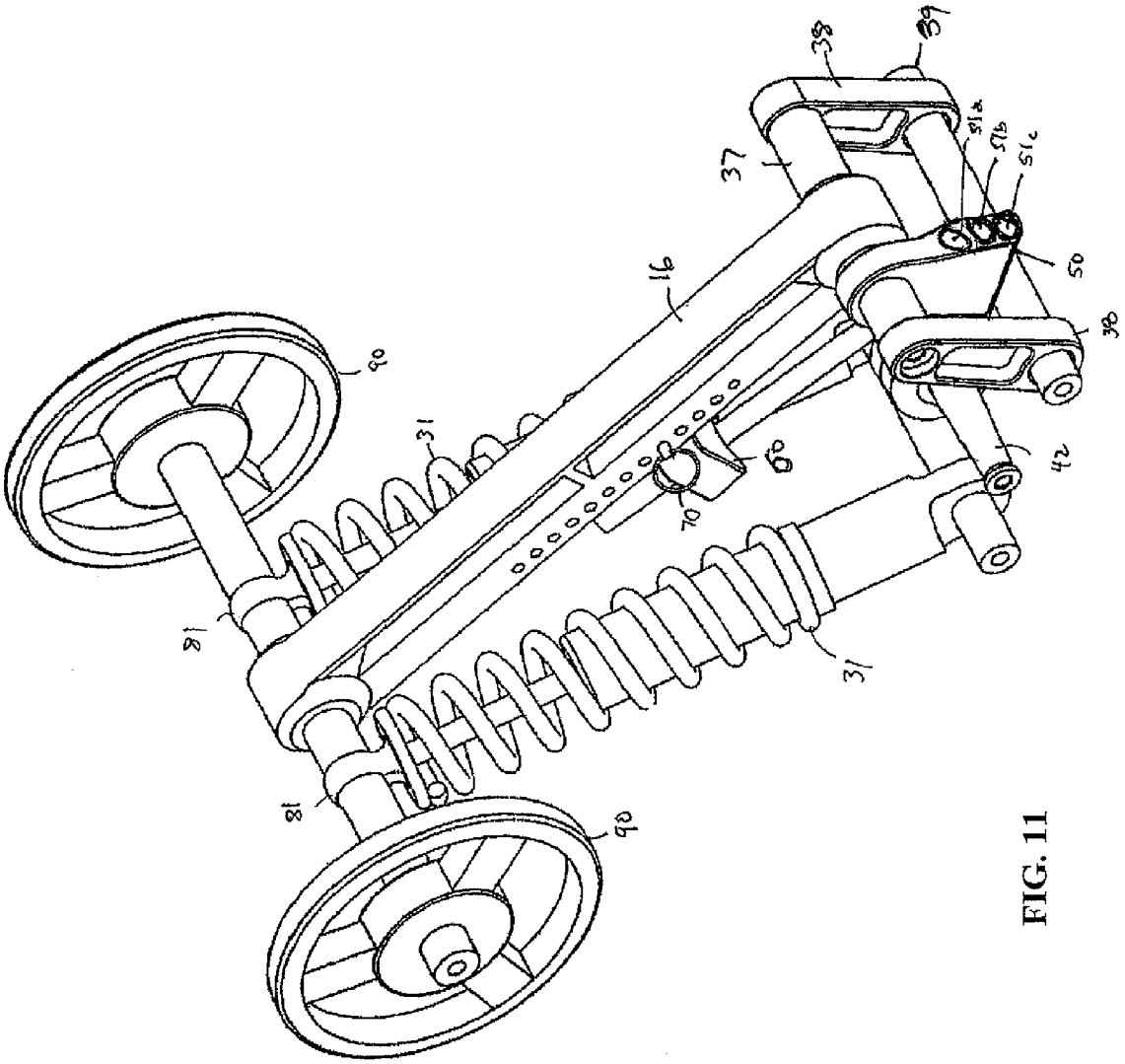

FIG. 11

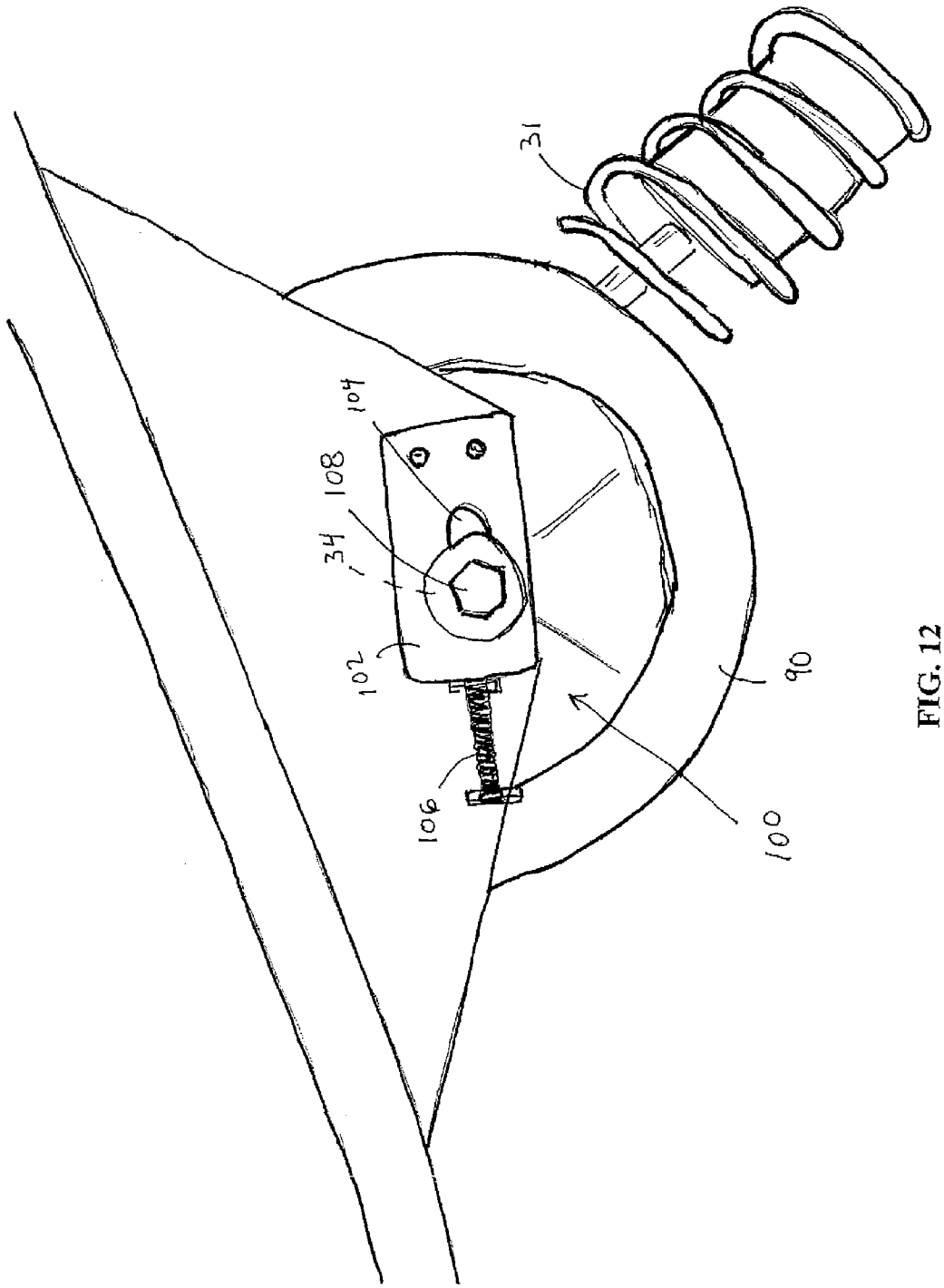

FIG. 12

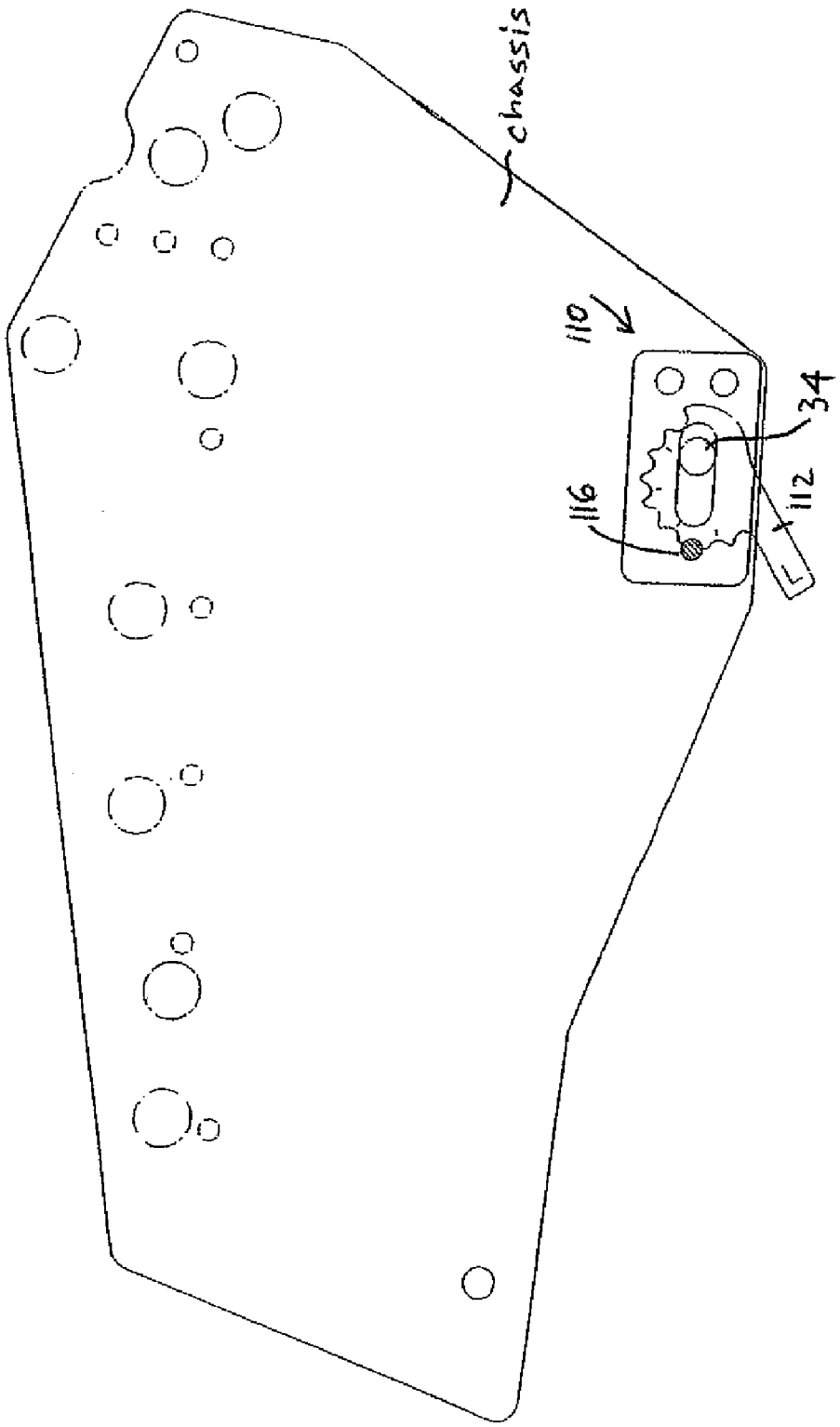

FIG. 13

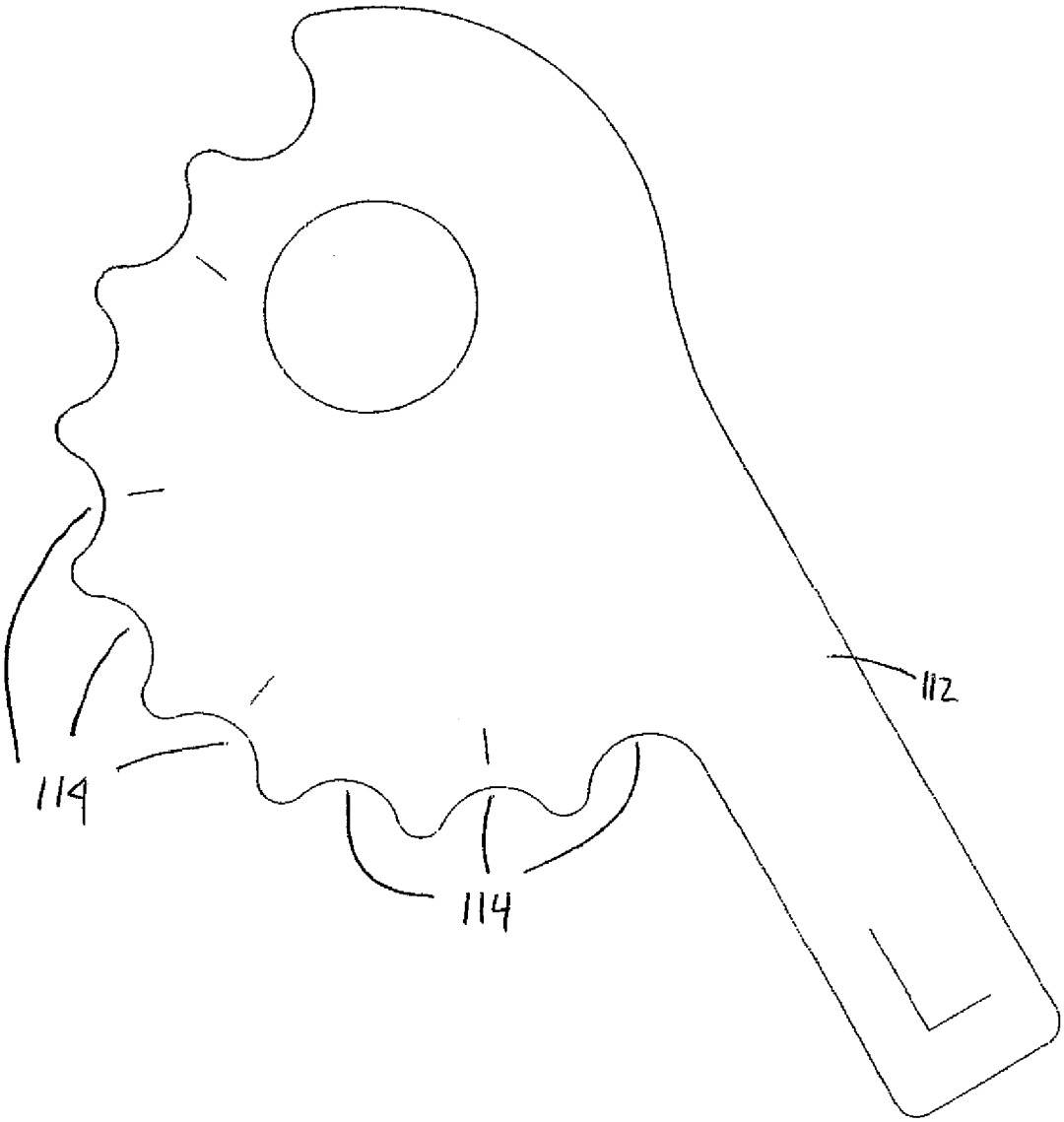

FIG. 14

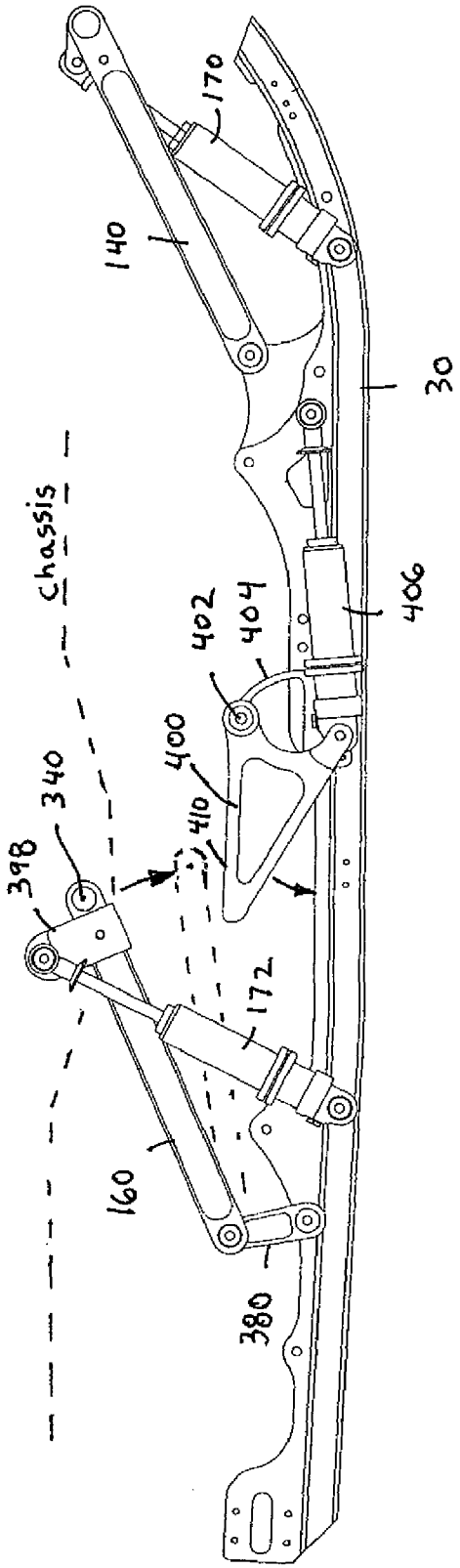

FIG. 15

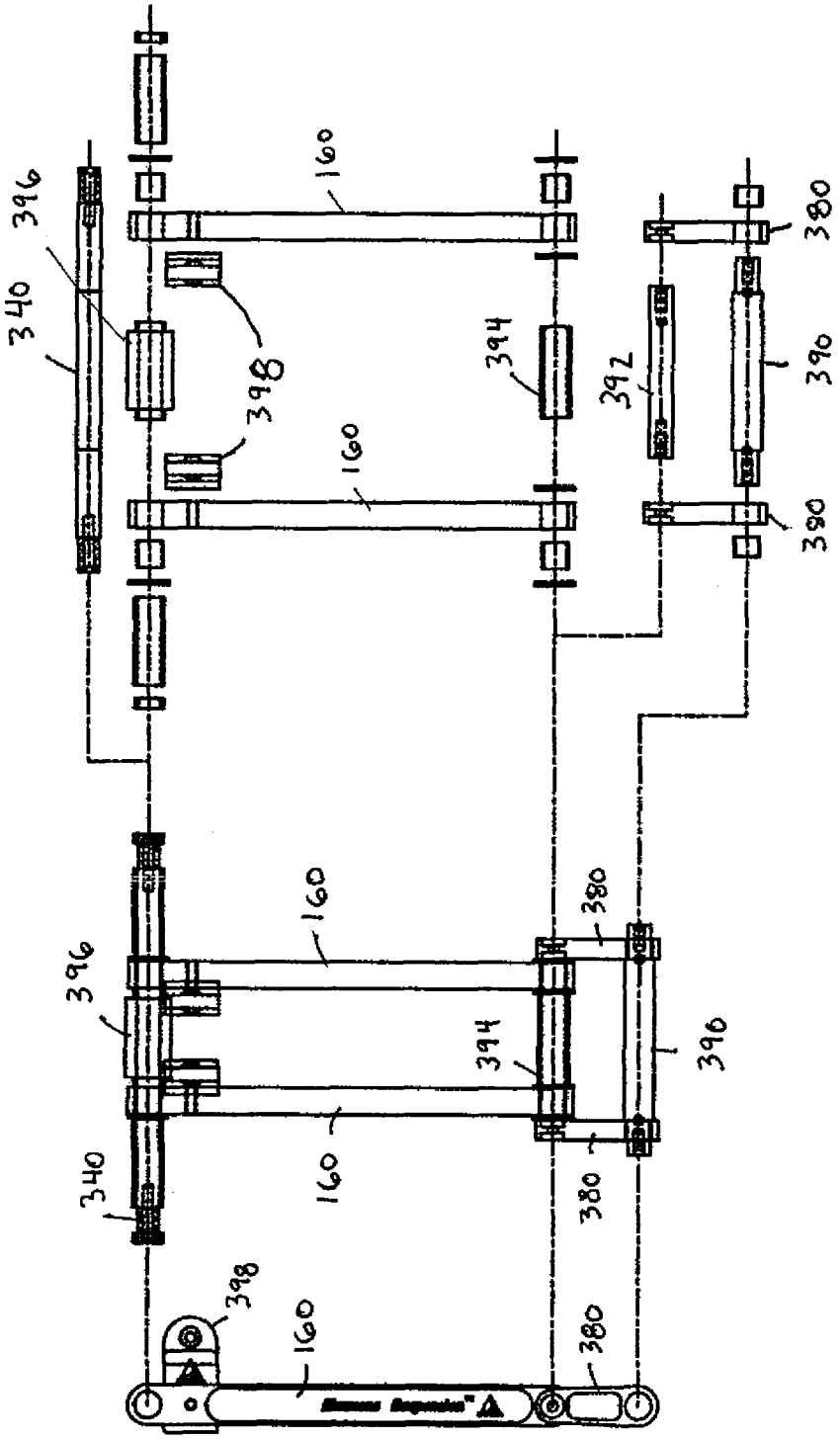
340
396
160
398
394
392
380
390
160
390
396
160
380
394
390
340
160
380
398
160
380

FIG. 16

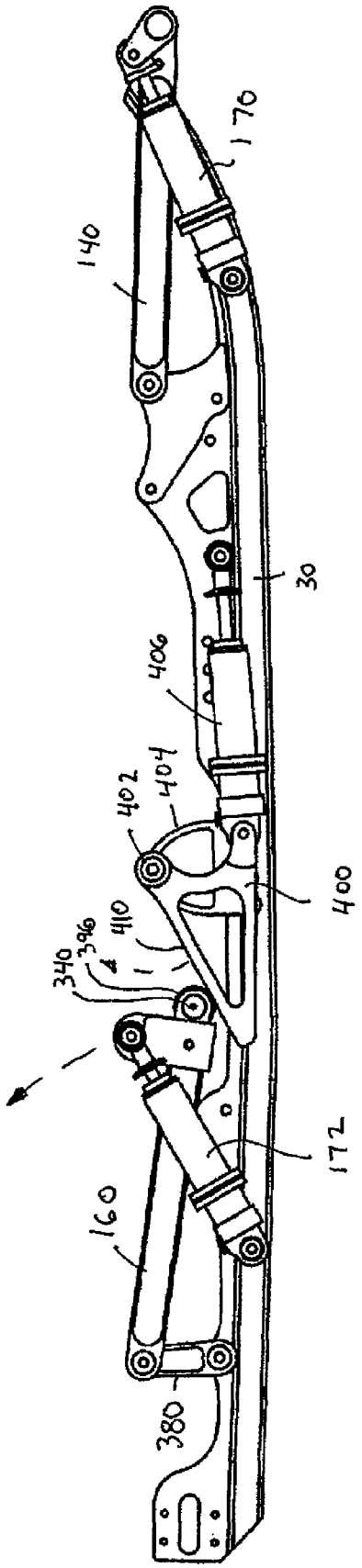

FIG. 17

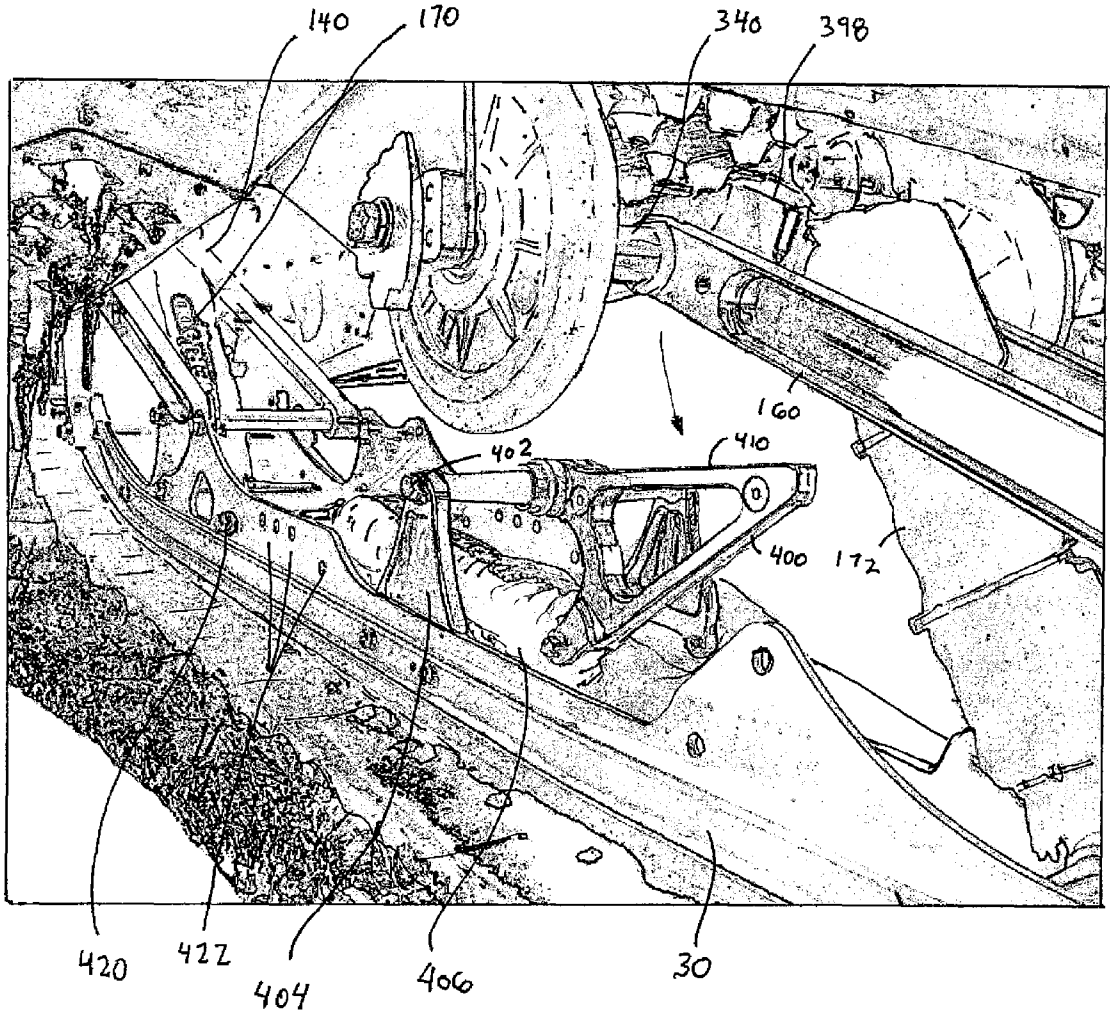

FIG. 18

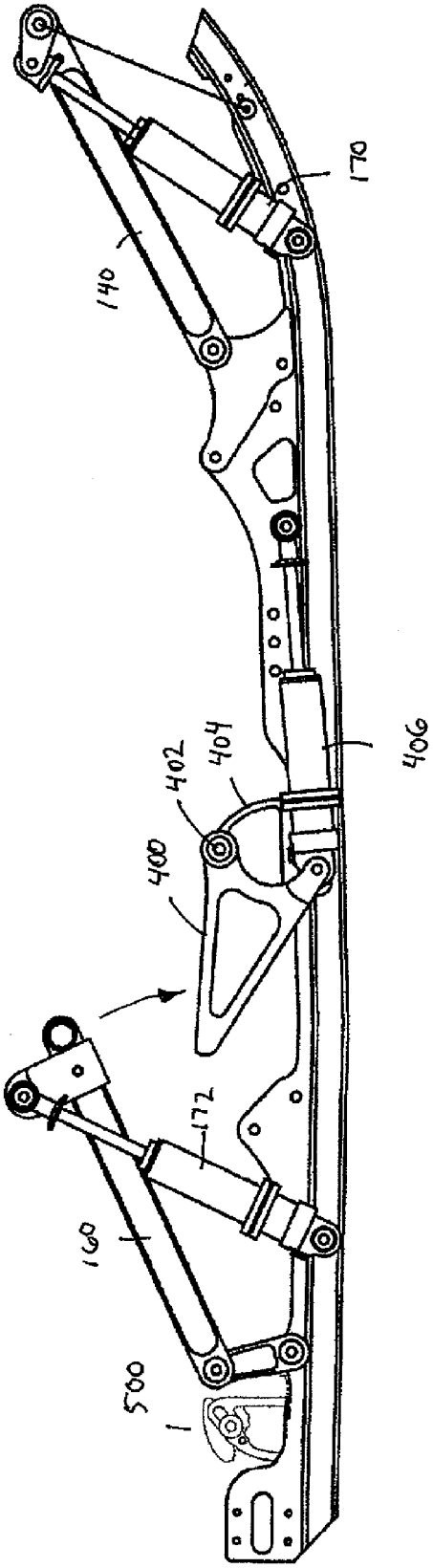

FIG. 19

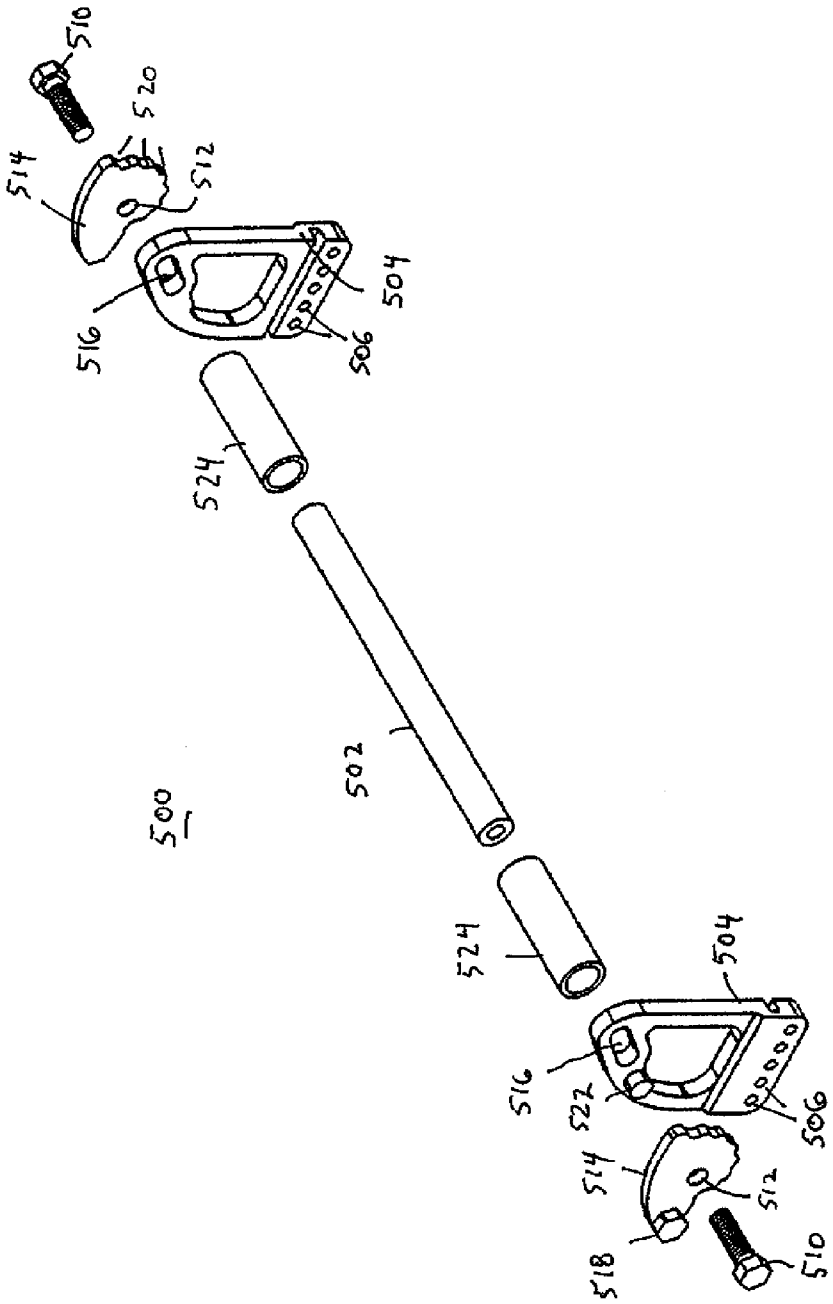
500
510
520
514
512
516
504
506
524
502
524
504
516
522
506
514
512
518
510

FIG. 20

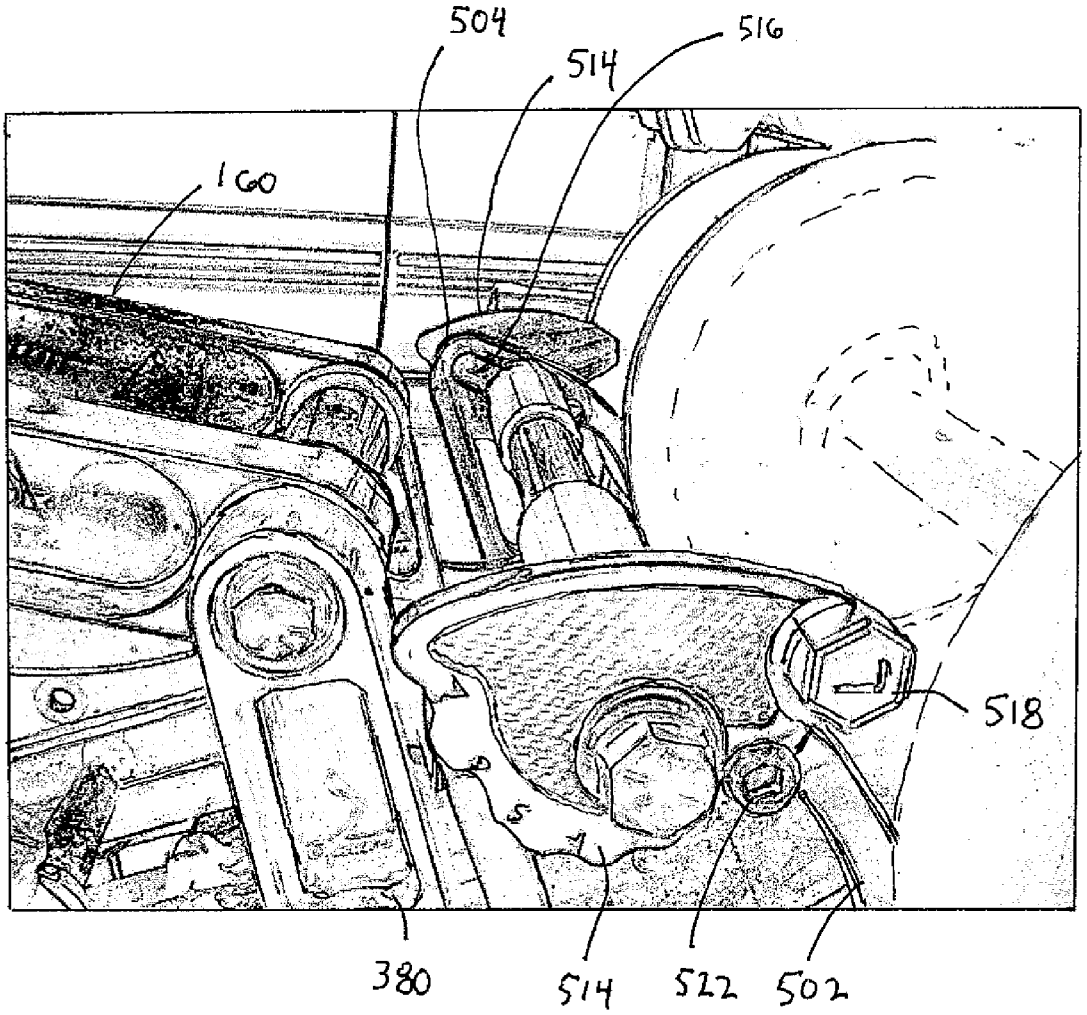

FIG. 21

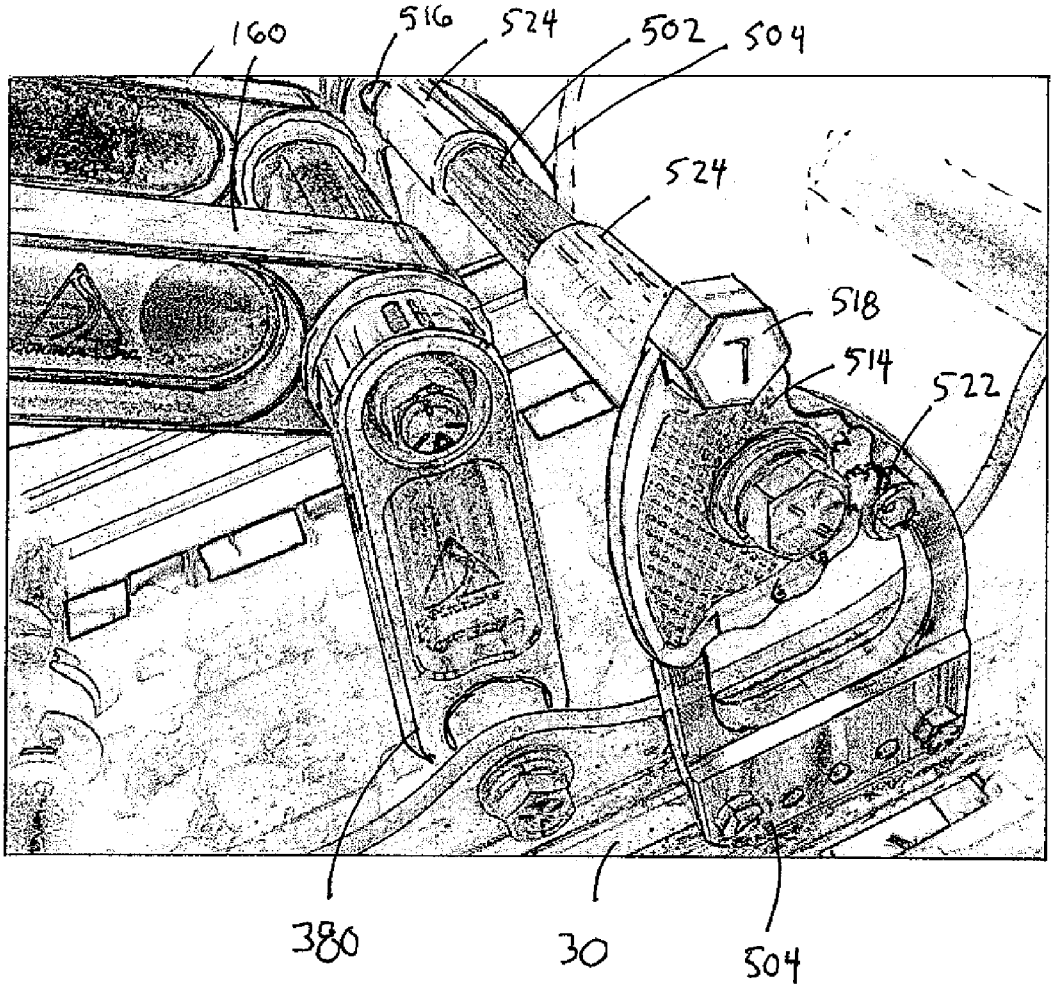

FIG. 22

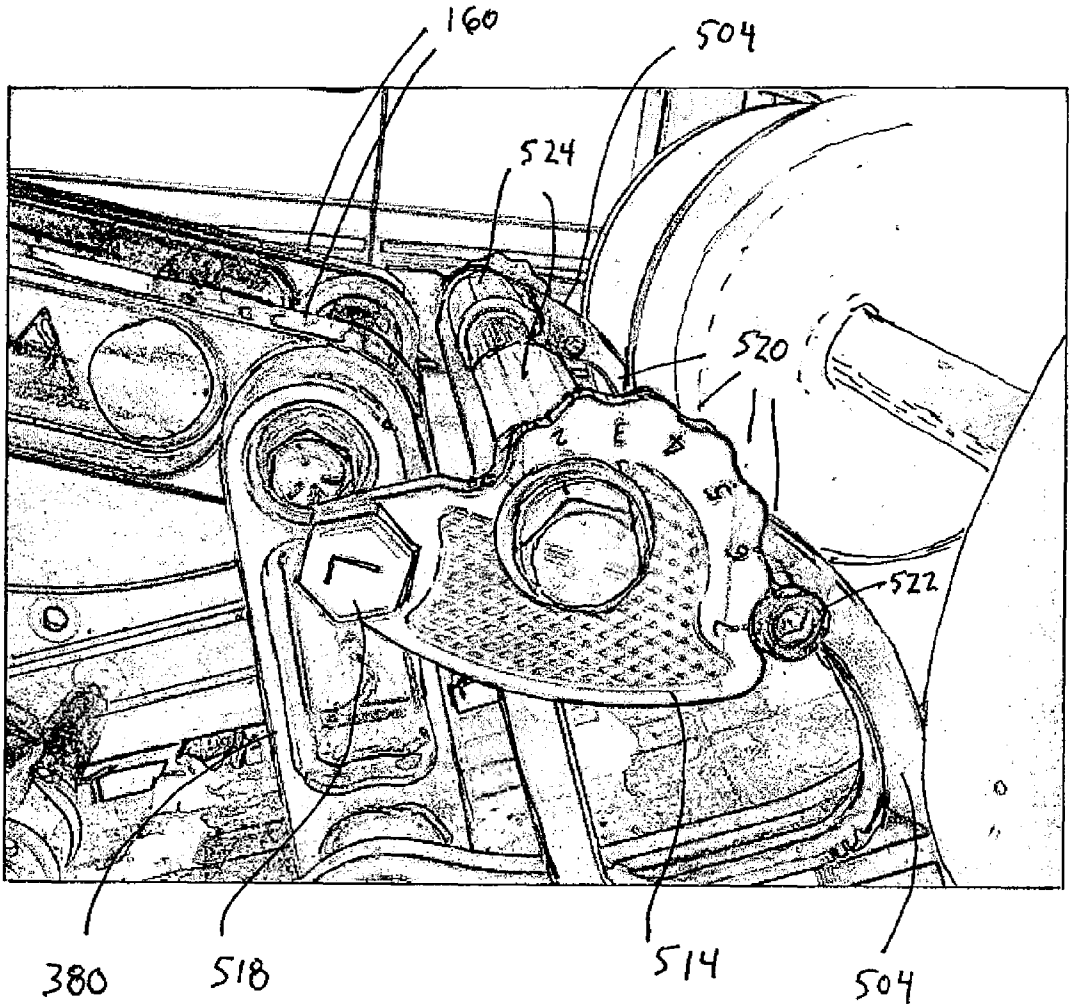

FIG. 23

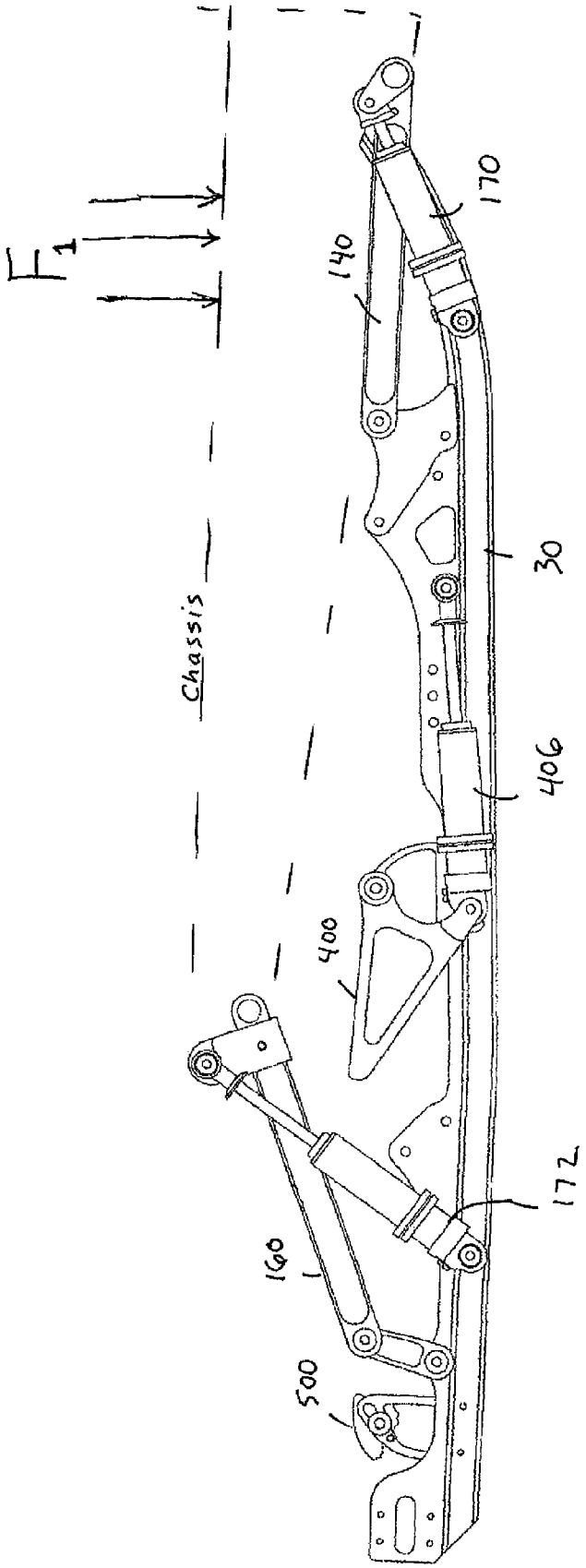

FIG. 24

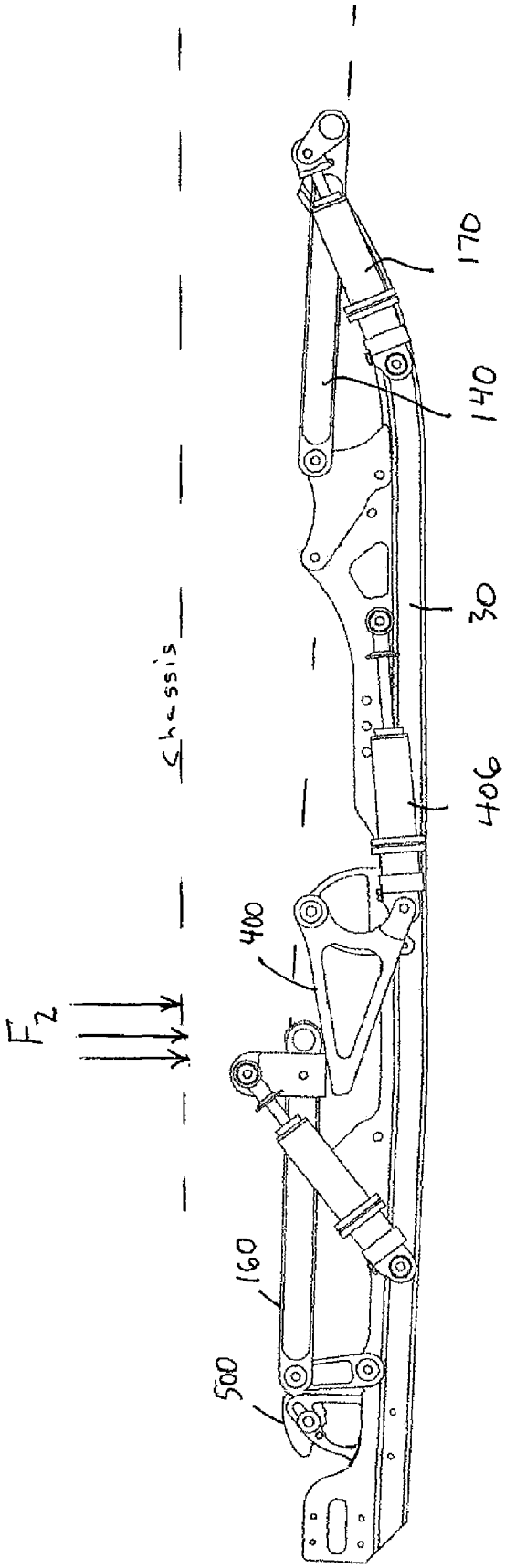

FIG. 25

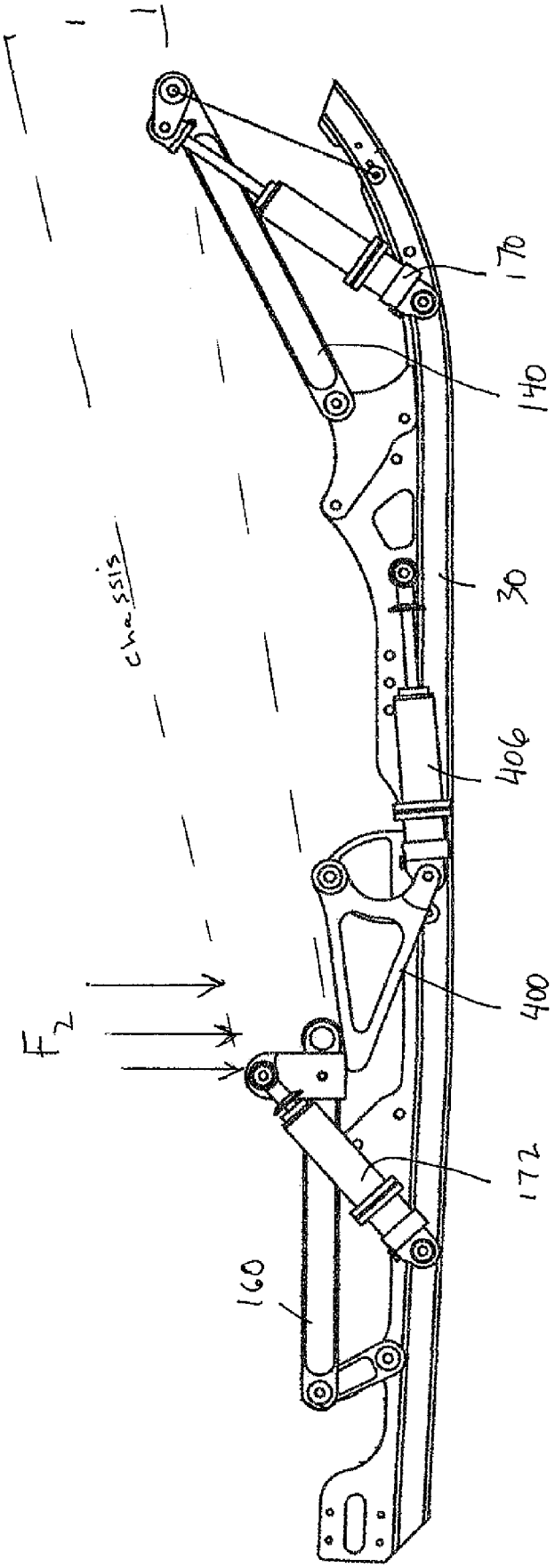

FIG. 26

SUSPENSION FOR TRACKED VEHICLES

RELATED APPLICATIONS

This application is a continuation-in-part of U.S. Pat. No. 7,533,750, which claimed priority from U.S. Provisional Application No. 60/721,296, filed on Sep. 28, 2005, the disclosure of each being hereby incorporated by reference in its entirety.

FIELD OF THE INVENTION

The invention relates to snowmobiles and more particularly to suspension systems for snowmobiles providing for efficient reconfiguration based on anticipated load conditions.

BACKGROUND OF THE INVENTION

Performance characteristics of snowmobiles, including ride comfort and weight balance, depend upon a variety of systems and components, including the snowmobile suspension. Modern snowmobile suspensions typically include two systems, a front suspension system for the skis and a rear suspension system for the track.

The rear suspension of a snowmobile supports an endless track driven by the snowmobile engine to propel the machine. The track is supported beneath the vehicle chassis by a suspension that is designed to provide proper weight balance and ride comfort by absorbing some of shock as the snowmobile traverses uneven terrain. Most modern snowmobiles utilize a slide rail suspension which incorporates a slide rail along with several idler wheels to support the track. The slide rail typically is suspended beneath the chassis by two or more suspension arms, each arm being attached at its upper end to the chassis of the snowmobile and attached at its lower end to the slide rail. The mechanical linkage of the slide rail to the suspension arms and to the snowmobile chassis typically is provided with springs and one or more shock absorbers, the springs being loaded to urge the slide rails downwardly away from the snowmobile chassis, and the shocks providing dampening forces for improved ride comfort.

A variety of configurations of suspension arms, springs, shocks, and shock rods have been utilized to alter the characteristics and feel of the ride given by a particular suspension system. U.S. Pat. No. 5,265,692 shows a snowmobile track suspension having a pair of generally parallel suspension arms connecting the slide rail to the snowmobile chassis. The lower end of the rear suspension arm has a pivot mount that is movable longitudinally of the slide rail. When this pivot is located at its forward most portion of longitudinal movement (i.e., at the forward end of a longitudinal slot), the suspension arms form a parallelogram with the snowmobile chassis and the slide rail so that upward movement of the front suspension arm is transmitted through the slide rail to the rear suspension arm, causing the slide rail to move upward in an orientation that is generally parallel to the snowmobile chassis. Thus, the front end of the slide rail cannot move higher than the back end of the slide rail. The longitudinal slot into which the lower end of the rear suspension arm is pivotally mounted permits the back end of these slide rails to move higher than the front end of the rails.

In light of the varying characteristics that can be built into a suspension system, a variety of competing suspension systems have been made commercially available, and different types of suspension systems commonly are employed on different types of machines, depending upon their primary usage (e.g., racing, touring, etc.). A need remains for an adjustable suspension system adaptable to perform across a variety of terrain and under diverse conditions.

BRIEF SUMMARY OF THE INVENTION

The present invention relates to a suspension system for a snowmobile that is adjustable by the rider to match the riding conditions and desired performance characteristics. In one embodiment, a system includes a slide rail for engagement with a lower portion of the snowmobile track and suspension arms mounted to the snowmobile chassis and the slide rail. Shocks and springs are provided for urging the slide frame downwardly away from the chassis. The front suspension arms have pivot connections at both ends, one end connected to the snowmobile chassis and the other end connected to the slide frame. The rear suspension arms are pivotally connected to the snowmobile chassis at upper ends and include a pivot connection at lower ends to the slide frame to permit some longitudinal movement of the lower end of the rear suspension arms with respect to the slide frame. An overload assembly provides an additional force tending to bias the slide rail away from the chassis. The overload force is applied at a location of the rear suspension arm between the upper and lower ends thereof. The position of the applied spring force can be user-adjusted, such as via a movable transfer block mechanism as further described hereinafter in order to modify performance characteristics of the snowmobile.

Benefits of a suspension incorporating one or more of the present inventions include: improved comfort; controlled machine attitude across a variety of operation speeds and conditions; and minimization of the change or variability of track tension across a variety of operational conditions.

One object of the present invention is the application of an overload force to a rear suspension arm at a location between the upper end and the lower end thereof.

Another object of the present invention is efficient user adjustment of the location of overload force application to control the force level transferred to the rear suspension arm.

Another object of the present invention is the application of a helical spring to provide the overload spring force. In one embodiment, the helical spring has an elongated spring arm for transferring the overload spring forces to the rear suspension arm.

Yet another object of the invention is the provision of a user-adjustable assembly for controlling overload force to a rear suspension arm. Suspension characteristics of the machine can be adjusted by changing spring force and/or transfer locations. In one embodiment of the present invention, a movable transfer block capable of sliding along the rear suspension arm is used to change the location of spring force transfer. A plurality of spaced apertures along the rear suspension arm provides a plurality of different positions for coupling the transfer block to the rear suspension arm, thereby providing an operator with a plurality of different suspension performance characteristics. An operator-accessible pin provides for efficient repositioning of the transfer block between locations along the rear suspension arm. In another embodiment of the invention, an overload spring force is applied at an upper extent of the rear suspension arms. An overload arm provides an overload force which is transferred to an rear suspension arm axle or directly to a rear suspension arm.

Yet another object of the present invention is the provision of a control means for selectively controlling a degree of mechanical coupling between rear and front suspension arms during various load conditions.

Yet another object of the present invention is the provision of a user-adjusted control means which provides a movable stop at different distances relative to ends of the rear suspension arms. Depending on the particular position of the movable stop, the degree of mechanical coupling between the front and rear suspension arms can be effectively controlled.

The foregoing has outlined rather broadly the features and technical advantages of the present invention in order that the detailed description of the invention that follows may be better understood. Additional features and advantages of the invention will be described hereinafter which form the subject of the claims of the invention. It should be appreciated by those skilled in the art that the conception and specific embodiment disclosed may be readily utilized as a basis for modifying or designing other structures for carrying out the same purposes of the present invention. It should also be realized by those skilled in the art that such equivalent constructions do not depart from the spirit and scope of the invention as set forth in the appended claims. The novel features which are believed to be characteristic of the invention, both as to its organization and method of operation, together with further objects and advantages will be better understood from the following description when considered in connection with the accompanying figures. It is to be expressly understood, however, that each of the figures is provided for the purpose of illustration and description only and is not intended as a definition of the limits of the present invention.

BRIEF DESCRIPTION OF THE DRAWINGS

For a more complete understanding of the present invention, reference is now made to the following descriptions taken in conjunction with the accompanying drawing, in which:

FIG. **1** is an illustration of a snowmobile in accordance with the present application.

FIG. **2** illustrates a portion of the snowmobile of FIG. **1** including components of a rear suspension of the machine of FIG. **1**.

FIG. **3** is an illustration of a portion of the rear suspension of the snowmobile of FIG. **1** shown in assembled and exploded format.

FIGS. **4-7** are illustrations of a portion of the rear suspension of FIG. **1**.

FIG. **8** illustrates components of the rear suspension in a compressed state.

FIG. **9** illustrates components of the rear suspension in a fully compressed state.

FIGS. **10** and **11** illustrate another embodiment of a rear suspension in accordance with the present invention.

FIG. **12-14** illustrate portions of a rear suspension of a snowmobile.

FIG. **15** is a side elevational view of another embodiment of a suspension system of a snowmobile in accordance with the present invention.

FIG. **16** is an assembly drawing illustrating portions of the rear suspension of FIG. **15**.

FIG. **17** is a depiction of the suspension assembly of FIG. **15** as under a fully loaded condition.

FIG. **18** is a perspective view of the suspension assembly of FIG. **15**.

FIG. **19** is a side elevational view of another embodiment of a suspension system in accordance with the present invention.

FIG. **20** is a perspective view of elements of a control means within the suspension system of FIG. **19**.

FIGS. **21-23** are perspective views of the control means of FIG. **20** shown under different operating orientations.

FIGS. **24-26** are depictions of the suspension system of FIG. **15** under certain load conditions.

DETAILED DESCRIPTION OF THE INVENTION

Applicant has found that prior art suspension systems appear optimized for certain conditions, but perform less optimally in other conditions. For example, in relatively deep powder, it may be particularly desirable to permit the front end of the slide rail suspension to move higher than the rear of the suspension, making it somewhat easier for the snowmobile track to plane out or rise above the powdery snow. Similarly, deep powder handling and performance are related to the degree to which the back end of the slide rails is permitted to rise above the front end of the slide rails (or, in other words, the extent to which the machine is permitted to "rock backwards" on the suspension).

FIGS. **1-14** depict portions of a snowmobile **10** having a rear suspension system for supporting the machine and for defining the path of the track **12** which propels the machine across the snow. Although the invention can be utilized in connection with a variety of rear suspension configurations, the invention will be described in the context of a particular preferred rear suspension illustrated in the drawings. Such a suspension includes a front suspension arm **14** and a rear suspension arm **16**, each arm extending downwardly and rearwardly from pivot connections to the snowmobile frame or chassis (often referred to as the "tunnel"). The lower end of each such arm **14**, **16** is secured, either directly or indirectly, to the slide rail **30**, beneath which the track slides. As the snowmobile tunnel obscures the rear suspension, FIGS. **2-14** depict the suspension elements as removed from the machine **10**.

Springs and shock absorbers **31** are provided to urge the slide rail **30** down and away from the snowmobile tunnel. Springs and shocks **31** act to control the relative movement of the suspension with respect to the chassis as the snowmobile moves over terrain of varying contours. Preferably, the rear suspension arm **16** is centrally positioned between the pair of rear shock absorbers **31** as shown in FIG. **3**. The relative lengths and orientations of the suspension arms **14** and **16** also control the movement and orientation of the suspension as it is compressed upwardly toward the chassis.

Shock absorbers **31** are connected between upper axle **34** and slide rail **30**. Shocks **31** include shock stem **82** attached to an upper shock mount **81**. Shock mount **81** is retained upon upper axle **34** by a journal bearing, etc. and is generally free to rotate relative to upper axle **34**. A plurality of spacers **84** position the upper shock mount upon axle **34**. Shocks **31** compress and retract in a direction of elongation **85** which is aligned to generally intersect the center axis of axle **34**. Shocks **31** include shock stems **82** which are aligned in the direction of elongation **85** so that shock stems **82** are aligned to generally intersect the center of axle **34**. In comparison, the shock center of typical prior art suspensions is offset relative to the axle **34** as shown in FIG. **16**. Similarly, the front shock of the suspension system of FIG. **16** is offset relative to the front axle.

Referring to FIGS. **2-5**, upper end **32** of rear arm **16** is pivotally connected to the snowmobile chassis via upper axle **34**. The lower end of arm **16** is connected to a pair of lower pivot arms **38**, which in turn are pivotally connected to slide rail **30**. The linkage of arm **16** with pivot arms **38** permits the front of the slide rail **30** to rise substantially independently of the rear portion of the slide rail. A pivot axis **36** is generally

defined as the center of stub shaft **37**. The lower ends of pivot arms **38** are pivotably couple to the slide rail **30** via shaft **39**. Upper axle **34** also carries a pair of upper idler wheels **90**. Rear idler wheels **91** are carried on the slide rail **30**.

Referring to FIGS. **5-9**, the suspension system includes an overload spring **40** which provides an overload spring force to the rear suspension arm tending to bias the rear suspension arm away from the machine chassis. Overload spring **40** is shown as a helical coil spring connected to the slide rail **30** by a shaft **42** and bearing **44** and including a pair of extended spring arms **46**, **48**. A portion of arm **46** is received within and retained by a retainer **50** which is connected to stub shaft **37**. Arm **46** may slide into and out of an aperture **51** of retainer **50** during machine operation. Retainer **50** is generally freely journaled about stub shaft **37**. Another embodiment of spring retainer **50** is illustrated in FIGS. **11** and **12**. In the embodiment of FIGS. **11** and **12**, spring retainer **50** has a plurality of apertures **51***a*, **51***b*, **51***c* into which the portion **46** of spring arm **40** can be received. The spring force, F, applied to the rear suspension arm **16** can be varied by selecting a different aperture **51***a*, **51***b*, **51***c*. Alternative embodiments of a spring retainer **50** would be appreciated by those of ordinary skill in the art. For example, a spring retainer **50** may have opposed apertures **51** having different distances away from the shaft **37** so that the spring force is varied depending on the particular aperture chosen.

Referring again to FIGS. **5-9**, arm **48** of overload spring **40** extends generally upwardly relative to the slide rail **30** and engages a transfer block **60** connected to the rear suspension arm **16**. Arm **48** of spring **40** engages the transfer block **60** in a sliding relationship and transfers an overload spring force, F, to the rear suspension arm **16** tending to bias the slide rail **30** away from the chassis. Transfer block **60** slides within a channel **64** defined within suspension arm **16**. A plurality of spaced apertures **66** are provided on suspension arm **16**. Apertures **66** are sized relative to an aperture **68** of transfer block **60** and a removable retaining pin **70** so that pin **70** is capable of retaining the transfer block **60** at an intermediate location between the upper end and lower end of rear suspension arm **16**.

FIGS. **7** and **8** depict the rear suspension in a load-carrying condition. FIG. **9** depicts the rear suspension at a fully compressed load-carrying condition.

FIGS. **13** and **14** illustrated another embodiment of an upper shock adjuster, generally indicated as numeral **110**. Upper shock adjuster **110** includes a plate **112** having a plurality of stops **114** which are differently spaced from a center **114**. Stops **114** engage a pin **116** coupled to the chassis. Axle **34** engages the plate center **114** so that as plate **112** is rotated the distance between the axle **34** center and the pin **116** changes. A duplicate assembly would be located at the opposite end of axle **34** (not shown) and together the assemblies **110** would be used to position the axle **34** relative to the chassis. As the rear suspension arm **16** and shock absorbers **31** are directly coupled to axle **34**, the movement of axle **34** relative to chassis also adjusts the angular orientation of the rear suspension arm **16** and the shock absorbers **31** relative to the chassis. A threaded fastener (not shown) similar to the second threaded fastener **108** of FIG. **12** can be used to secure the plate **112** to the chassis and temporarily fix the orientation of axle **34**, shock absorbers **31** and rear suspension arm **16** relative to the slide rail **30**.

One aspect of the present invention is the application of an overload spring force to a downwardly angled rear suspension arm **16** at an intermediate location between the upper end and the lower end thereof. The operator is afforded efficient adjustment of the location of the overload spring force application by manipulation of a user-adjustable transfer block **60**. Upon removal of pin **70**, the transfer block **60** is capable of sliding along the rear suspension arm **16** during repositioning to change the location of spring force transfer. The use of a plurality of spaced apertures **66** along the rear suspension arm **16** provides a plurality of positions for coupling the transfer block **60** to the rear suspension arm **16**. Movement of the transfer block **60** along the rear suspension arm **16** effectively changes the level of spring force applied by the overload spring **40** to the rear suspension arm **16**. For example, the spring force will be greater when the transfer block **60** is closer to the spring **40** center and decrease as the transfer block **60** is positioned further away along the rear suspension arm **16**.

FIGS. **15-19** illustrate another embodiment of a suspension system of the present invention. In this embodiment, the overload force is applied via a pivoting overload arm **400**. The overload force is transferred to the rear suspension arm only after a predetermined compression of the suspension system.

FIG. **15** illustrates a side elevational view of aspects of a second embodiment of a snowmobile suspension system of the present invention. Slide rail **30** is movably coupled to a snowmobile chassis via front and rear suspension arms **140**, **160**. Each of a pair of front suspension arms **140** is pivotally connected at one end to the chassis and at the other end to the slide rail **30**. A front shock **170** is connected between an upper end of front suspension arm **140** and slide rail **30**. A rear shock **172** is connected between slide rail **30** and a shock mount **398**. Shock **170**, **172** may include coil-over springs (not shown for clarity purposes) or may be an air-shocks without a coil-over springs.

FIG. **16** is an exploded view of portions of the suspension system of FIG. **15**. Each of the pair of rear suspension arms **160** is pivotally connected at one end to the snowmobile chassis via an upper axle **340** and to a movable lower pivot arm **380**. Pivot arms **380** are pivotally connected to slide rail **30** via shaft **390** and to rear suspension arms **160** via upper shaft **392**. Covers **394**, **396** are provided over shafts **392**, **340**, respectively. Covers **394**, **396** are preferably of resilient construction. Portions of an upper shock mount **398** are also connected near an upper end of the rear suspension arms **160**.

Referring again to FIG. **15** the suspension system includes an overload arm **400** for providing an overload force to the rear suspension arm assembly during certain operating conditions. Overload arm **400** is pivotally supported relative to slide rail **30** via a pivot **402** provided on arm support **404**. A shock assembly **406** is coupled between the overload arm **400** and the slide rail **30**. The overload arm **400** includes an engaging surface **410** which engages upper axle **340** during certain overload conditions. In a light load condition, the overload arm **400** is spaced away from the rear suspension arms **160** and not engaged by shaft **340**. As depicted by the phantom lines in FIG. **15**, rear suspension arm **160** rotates during operation of the snowmobile and depending on the load conditions the overload arm **400** is engaged by the rear suspension arm assembly. Such contact between overload arm **400** and the rear suspension arm assembly causes rotation of the overload arm about pivot **402**. As rotation of the overload arm is controlled via shock assembly **406**, a force tending to resist motion between the chassis and the slide rail **30** is transferred via overload arm **400**.

FIG. **17** is a side view of the suspension assembly of FIG. **15** depicted in a fully loaded condition. As shown, the overload arm **400** has been rotated about its pivot **402** by engagement with the upper axle **340**/upper end of the rear suspension arms **160**. The cover **396** on upper axle **340** is in sliding contact with a flat portion of the engaging surface **410**. As

depicted, the overload spring assembly **406** provides a force tending to resist collapse of the rear suspension assembly into the configuration of FIG. **17**.

FIG. **18** is a perspective view of a snowmobile having the suspension system of FIG. **15**. The connection between the second shock assembly **31** and the slide rail **30** may be adjusted by repositioning a shaft **420** between different apertures **422** of the slide rail **30**. By changing the location of shaft **420**, the overload arm **400** is rotated about its pivot **402**. Adjustments to overall ride/performance characteristics of the snowmobile may be made by adjusting this connection between the slide rail **30** and shock assembly **406**.

FIG. **18** also illustrates that the shock assembly **172** is positioned between the pair of rear suspension arms **160**. The suspension system of FIG. **15** includes single rear shock assembly **172** coupled between the slide rail **30** and the rear suspension arm assembly. In other embodiments, two or more shock assemblies may be utilized to control movement of the rear suspension arm assembly.

The shock assembly **406** provides a force tending to resist movement of the overload arm **400**. In one embodiment of the invention, the shock assembly **406** provides a controlled damping force tending to resist movement of the rear suspension arm assembly in a vertical direction. The shock assembly **406** controls movement of the rear suspension arm assembly during certain load conditions. Once the suspension system is released from a collapsed condition, the shock assembly **406** may not necessarily provide a force to the rear suspension arm **160** tending to restore the rear suspension arm assembly into a pre-load condition. That is, the shock assembly **172** may accelerate the rear suspension arm assembly away from contact with the overload arm **400**. In this regard, the overload arm and shock assembly **406** may provided a controlled application of forces tending to resist movement of the rear suspension arm assembly in one or both directions of collapse and return.

In the embodiment of FIGS. **15-18**, the overload arm **400** transfers an overload force tending to resist motion of the slide rail **30** toward the chassis. In this embodiment, the axle **340** is positioned at the end of rear suspension arms **160**. In other example, the overload force applied by overload arm **400** could be transferred away from the end of the rear suspension arms **160**. For example, the overload arm **400** could be extended to contact the rear suspension arms **160** between its upper and lower ends. While the contact between overload arm **400** and axle **340** includes a sliding motion, in alternative embodiments a roller can be attached to axle **340** allowing the roller to roll along the engaging surface **410** of overload arm **400**.

FIG. **19** illustrates another embodiment of a suspension assembly further include an adjustable control means **500** for selectively coupling the front and rear suspension arms **160**, **140** during certain operational load conditions. As described herein, contact is only made between the control means **500** and the rear suspension arm assembly during particular load operations.

FIG. **20** is a perspective view of components of control means **500**. A shaft **502** is held between a pair of supports **504** which are coupled to the slide rail **30** via threaded fasteners (not shown) passing through apertures **506** of the supports **504**. Ends of shaft **502** are threaded and receive portions of threaded fasteners **510** which pass through an aperture **512** on adjuster plates **514** and through angled slot apertures **516** on the supports **504**. The adjuster plates **514** include a hex coupling **518** for engaging a standard hex socket or wrench during an adjustment procedure. The adjusters **514** include a plurality of stops **520** which are spaced with varying degrees relative to aperture **512**. Control means **500** includes a pair of pins **522** which engage stops **520**. A resilient cover **524** on shaft **502** engages portions of the rear suspension arm assembly during certain load conditions. Cover **524** prevents a hard contact between portions of the rear suspension arm assembly and shaft **502**.

As a result of the stops **520**, the adjusters **514** have a tendency to rest when stops **520** are aligned with pins **522**. Thus, since the adjusters **514** tend to stop wherever a new stop **520** is encountered, this arranged can be termed "indexed." An indexed mechanism is simpler to use and allows the user to visually confirm that the adjusters **514** have been correctly set.

FIGS. **21-23** are perspective views of the adjustable control means **500** on a suspension assembly shown in different configurations whereby adjusters **514** have been rotated to move shaft **502** forward (toward the machine front). To move adjusters **514**, fasteners **510** are first loosened and hex coupling **518** is then engaged by a wrench or socket and adjusters **514** are rotated about the fasteners **510** into a desired position. The fasteners **510** are then secured to retain adjusters **514** in the desired position.

While the control means **500** is preferably operated using a hex socket or wrench coupled to hex coupling **518**, it should be noted that it is also possible to rotate axle adjusters **514** by means of a remote mechanism. For example, the adjusters **514** could be rotated via a hydraulic system. Other systems involving pneumatic actuation or push-pull cables could be implemented to allow the rider to adjust the suspension while seated on the snowmobile.

FIG. **24** depicts the suspension assembly and slide rail **30** after a forward-located force, F**1**, has collapsed the front suspension arm **140**. Under such a load condition, the control means **500** does not engage the rear suspension assembly and rear suspension arms **160** are free to move independently relative to the front suspension arms **140**. The suspension assembly would also assume this orientation under a loading condition with a generally centrally-located force.

FIG. **25** depicts the suspension assembly and slide rail **30** after a rearward-located force, F**2**, has collapsed both the rear and front suspension arms **160**, **140**. Such a force may be generated, for example, during machine acceleration, operating in a steep climb or across large moguls or other aggressive terrain. As force F**2** is applied, the rear suspension arms **160** rotate toward slide rail **30** and contact is made between the suspension arms **160** and the control means **500**. Further application of force, F**2**, results in a "coupling" of the rear suspension arms **160** with the front suspension arms **140**. As a result of this coupling effect, the front suspension arms **140** are forced to rotate toward the slide rail **30** as the rear suspension arms **160** are further loaded. Under such conditions, forces are transferred via the chassis tunnel causing the front suspension arms **140** to rotate toward the slide rail **30** as the rear suspension arms are further rotated under the load of force, F**2**.

FIG. **26** is provided for comparison purposes and illustrates the suspension assembly of FIG. **25** but without the control means **500**. FIG. **25** depicts an operating condition where a force, F**2**, is applied to a rear portion of the assembly. Without the coupling effect provided by control means **500**, the front suspension arms **140** are not forcibly biased toward the slide rail **30** as depicted in FIG. **25**.

In many load conditions, contact is not made between control means **500** and the rear suspension assembly. That is control means **500** does not limit the range of motion of rear suspension arms **160**. However under some conditions, when contact is made between control means **500** and the rear

suspension arm assembly, a coupling is generated between the rear suspension arms **160** and the front suspension arms **140**. The degree of inclination lower pivot arm **380** is allowed before the suspension becomes coupled is a function of overall suspension system geometry and the orientation of the adjustable control means **500**. By providing a selective control means **500**, the rider is able to efficiently adjust the snowmobile suspension based on anticipated operating conditions.

Although the present invention and its advantages have been described in detail, it should be understood that various changes, substitutions and alterations can be made herein without departing from the spirit and scope of the invention as defined by the appended claims. Moreover, the scope of the present application is not intended to be limited to the particular embodiments of the process, machine, manufacture, composition of matter, means, methods and steps described in the specification. As one of ordinary skill in the art will readily appreciate from the disclosure of the present invention, processes, machines, manufacture, compositions of matter, means, methods, or steps, presently existing or later to be developed that perform substantially the same function or achieve substantially the same result as the corresponding embodiments described herein may be utilized according to the present invention. Accordingly, the appended claims are intended to include within their scope such processes, machines, manufacture, compositions of matter, means, methods, or steps.

What is claimed is:

1. A snowmobile suspension mountable to the chassis of a snowmobile and about which an endless track is carried, the suspension comprising:

a slide rail for engagement with a lower portion of the endless track;

a downwardly angled rear suspension arm having an upper end pivotally connected to the snowmobile chassis and a lower end pivotally connected to the slide rail;

a shock absorber coupled at one end to the snowmobile chassis and at another end to the slide rail;

a coil spring secured around said shock absorber; and

an overload spring away from the shock absorber and which forces the slide rail away from the chassis, wherein an overload spring force is transferred to the rear suspension arm at a location between the upper end and the lower end of said rear suspension arm, wherein the overload spring includes an overload arm which transfers the overload spring force to the rear suspension arm, wherein the overload arm is pivotally coupled to the slide rail, and

wherein the overload spring force is transferred near an end of the rear suspension arm.

2. The snowmobile suspension of claim **1** wherein the overload arm is movable and engages the rear suspension arm at a common shaft.

3. The snowmobile suspension of claim **2** wherein the slide rail includes a plurality of apertures and the overload spring is retained at a particular position along the slide rail by engaging one of the plurality of apertures.

4. A snowmobile suspension mountable to the chassis of a snowmobile and about which an endless track is carried, the suspension comprising:

a slide rail for engagement with a lower portion of the endless track;

a downwardly angled rear suspension arm having an upper end pivotally connected to the snowmobile chassis and a lower end pivotally connected to the slide rail;

a shock absorber coupled at one end to the snowmobile chassis and at another end to the slide rail;

a coil spring secured around said shock absorber; and

an overload spring away from the shock absorber and which forces the slide rail away from the chassis, wherein an overload spring force is transferred to the rear suspension arm at a location between the upper end and the lower end of said rear suspension arm, and

control means for limiting an amount of mechanical coupling between the rear suspension arm and a front suspension arm.

5. The snowmobile suspension of claim **4** wherein in the control means includes a movable stop positioned to limit the rear suspension arm to a particular range of motion under a particular load condition.

6. The snowmobile suspension of claim **5** wherein the control means includes an adjuster for changing the position of the movable stop relative to the slide rail.

7. The snowmobile suspension of claim **6** wherein the adjuster includes a plurality of stops defined as a plurality of indexed stops.

8. A method of adjusting the performance characteristics of a snowmobile suspension system comprising:

providing a snowmobile having a chassis and a suspension system mounted to the chassis and about which an endless track is carried, the suspension system comprising a downwardly angled rear suspension arm having an upper end pivotally connected to the snowmobile chassis and a lower end pivotally connected to the slide rail, a shock absorber and coil spring around the shock absorber, said shock absorber being connected between the snowmobile chassis and the slide rail, and an overload spring assembly including an overload spring engaging an overload arm, with said overload arm being rotatably connected to a overload arm support connected between sides of the slide rail away from said shock absorber, with said overload spring assembly providing a overload spring force tending to bias the slide rail away from the chassis, wherein the overload spring force is transferred to the rear suspension arm at a location between the upper end and the lower end; and

adjusting the location of the overload spring assembly from a first location along the slide rail to a second location along the slide rail by moving the arm support from a first location to a second location along the slide rail, wherein a set of performance characteristics changes as the location of the overload spring assembly moves between the first location and the second location,

wherein the step of adjusting is achieved by selectively moving the overload arm support of the overload spring assembly along the slide rail.

9. The method of claim **8** further comprising:

providing a plurality of apertures spaced along the slide rail and wherein the overload arm support is selectively coupled to the slide rail via a fastener engaging one of the plurality of apertures.

10. The method of claim **8** wherein the overload spring assembly transfers the overload spring force to an axle connected to one end of the rear suspension arm.

11. A snowmobile suspension mountable to the chassis of a snowmobile and about which an endless track is carried, the suspension comprising:

a slide rail for engagement with a lower portion of the endless track;

a downwardly angled rear suspension arm having an upper end pivotally connected to the snowmobile chassis and a lower end pivotally connected to the slide rail;

a shock absorber coupled at one end to the snowmobile chassis and at another end to the slide rail;

a coil spring secured around the shock absorber;

an overload spring away from the shock absorber which forces the slide rail away from the chassis, wherein an overload spring force is transferred to the rear suspension arm at a location between the upper end and the lower end; and

a movable stop which engages the rear suspension arm during a certain load condition wherein upon engagement of the movable stop with the rear suspension arm, the rear suspension arm is mechanically coupled to a front suspension arm.

12. The snowmobile suspension of claim **11** further comprising a overload arm connected to the slide rail with the overload spring applying a spring force through the overload arm to the rear suspension arm tending to force the slide rail away from the chassis.

13. The snowmobile suspension of claim **11** further comprising an adjuster which maintains the movable stop in one of a plurality of positions relative to the slide rail, said adjuster capable of being repositioned to change a relationship between the rear suspension arm and a front suspension arm.

14. A snowmobile suspension mountable to the chassis of a snowmobile and about which an endless track is carried, the suspension comprising:

a slide rail for engagement with a lower portion of the endless tract;

a downwardly angled rear suspension arm connected between an upper axle and the slide rail;

a shock absorber coupled at one end to the snowmobile chassis and at another end to the slide rail;

a coil spring secured around said shock absorber;

an adjuster for maintaining a stop in one of a plurality of positions relative to the chassis so as to control a relationship between the rear suspension arm and a front suspension arm during certain load conditions; and

an overload spring away from the shock absorber and which forces the slide rail away from the chassis, wherein an overload spring force is transferred to the rear suspension arm at a location between the upper end and the lower end.

15. The snowmobile suspension of claim **14** wherein the adjustor includes a plate having an aperture and a plurality of stops positioned at different distances away from the aperture, said plate capable of being temporarily secured to the slide rail to temporarily fix the relationship between stop and the slide rail.

16. A snowmobile suspension mountable to the chassis of a snowmobile and about which an endless track is carried, the suspension comprising:

a slide rail for engagement with a lower portion of the endless track;

a downwardly angled rear suspension arm having an upper end pivotally connected to the snowmobile chassis and a lower end pivotally connected to the slide rail;

a shock absorber coupled at one end to the snowmobile chassis and at another end to the slide rail;

a coil spring secured around said shock absorber; and

an overload spring away from the shock absorber and which forces the slide rail away from the chassis, wherein an overload spring force is transferred to the rear suspension arm at a location between the upper end and the lower end of said rear suspension arm,

wherein the overload spring includes a second shock absorber coupled to the slide rail and extending generally parallel with side edges of the slide rail.

17. The snowmobile suspension of claim **14** wherein the overload spring includes a second shock absorber coupled to the slide rail and extending generally parallel with side edges of the slide rail.

* * * * *