US007997372B2

(12) **United States Patent**
Maltais

(10) **Patent No.: US 7,997,372 B2**
(45) **Date of Patent: *Aug. 16, 2011**

(54) **SNOWMOBILE AND FEATURES THEREOF ALLOWING FOR DIFFERENT TUNNEL WIDTHS**

(75) Inventor: **Hugues Maltais**, Valcourt (CA)

(73) Assignee: **Bombardier Recreational Products Inc.**, Valcourt (CA)

(*) Notice: Subject to any disclaimer, the term of this patent is extended or adjusted under 35 U.S.C. 154(b) by 0 days.

This patent is subject to a terminal disclaimer.

(21) Appl. No.: **12/844,326**

(22) Filed: **Jul. 27, 2010**

(65) **Prior Publication Data**

US 2010/0288572 A1 Nov. 18, 2010

Related U.S. Application Data

(60) Continuation of application No. 12/476,791, filed on Jun. 2, 2009, now Pat. No. 7,789,184, which is a division of application No. 11/671,694, filed on Feb. 6, 2007, now Pat. No. 7,753,154.

(51) **Int. Cl.**
B62M 27/02 (2006.01)

(52) **U.S. Cl.** **180/190**

(58) **Field of Classification Search** 180/190, 180/311, 68.4

See application file for complete search history.

(56) **References Cited**

U.S. PATENT DOCUMENTS

5,607,026	A	3/1997	Rioux et al.	
5,685,387	A	11/1997	Rioux et al.	
6,032,754	A	3/2000	Izumi et al.	
6,880,659	B2	4/2005	Yamamoto	
6,926,107	B2 *	8/2005	Nishijima	180/190
6,929,081	B2	8/2005	Pichler et al.	
6,942,051	B2	9/2005	Mallette et al.	
7,059,440	B1	6/2006	Berg et al.	
7,159,680	B2	1/2007	Pichler et al.	
7,198,127	B2	4/2007	Yatagai et al.	
7,303,037	B2	12/2007	Yatagai et al.	
7,469,764	B2	12/2008	Girouard et al.	
2004/0040768	A1	3/2004	Yamamoto	
2004/0182624	A1	9/2004	Yatagai et al.	
2007/0062751	A1 *	3/2007	Rasidescu et al.	180/190
2007/0089920	A1	4/2007	Kelahaara	

* cited by examiner

Primary Examiner — Tony H. Winner

(74) *Attorney, Agent, or Firm* — Osler, Hoskin & Harcourt LLP

(57) **ABSTRACT**

A family of snowmobiles having different tunnel widths is disclosed. A snowmobile having spacers between the tunnel and the sides of the engine compartment and a method of manufacturing such a snowmobile are also disclosed. A snowmobile having a countershaft which is disposed rearwardly of the engine, vertically higher than the air intake opening, and forwardly of the air intake controller is also disclosed.

20 Claims, 19 Drawing Sheets

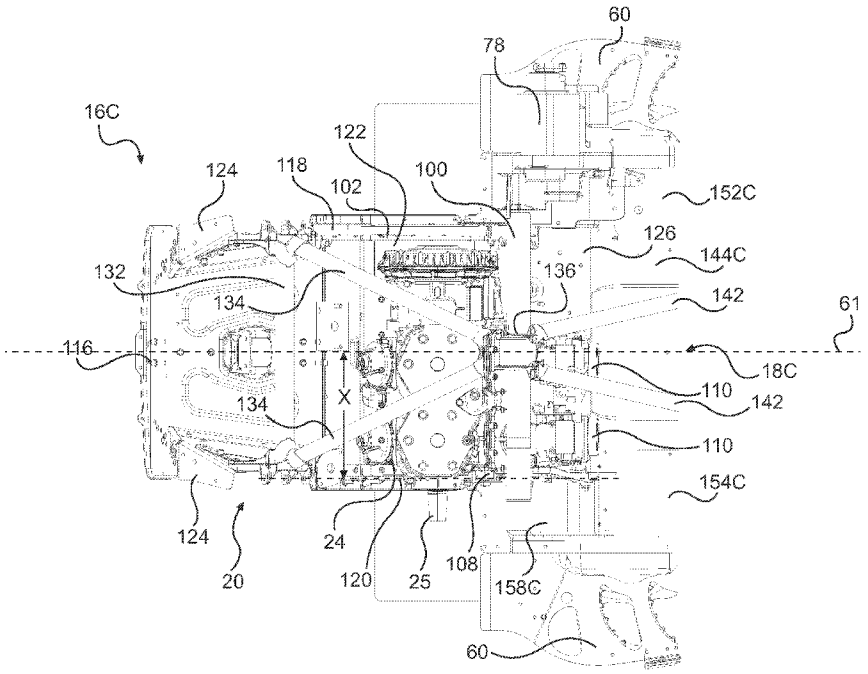

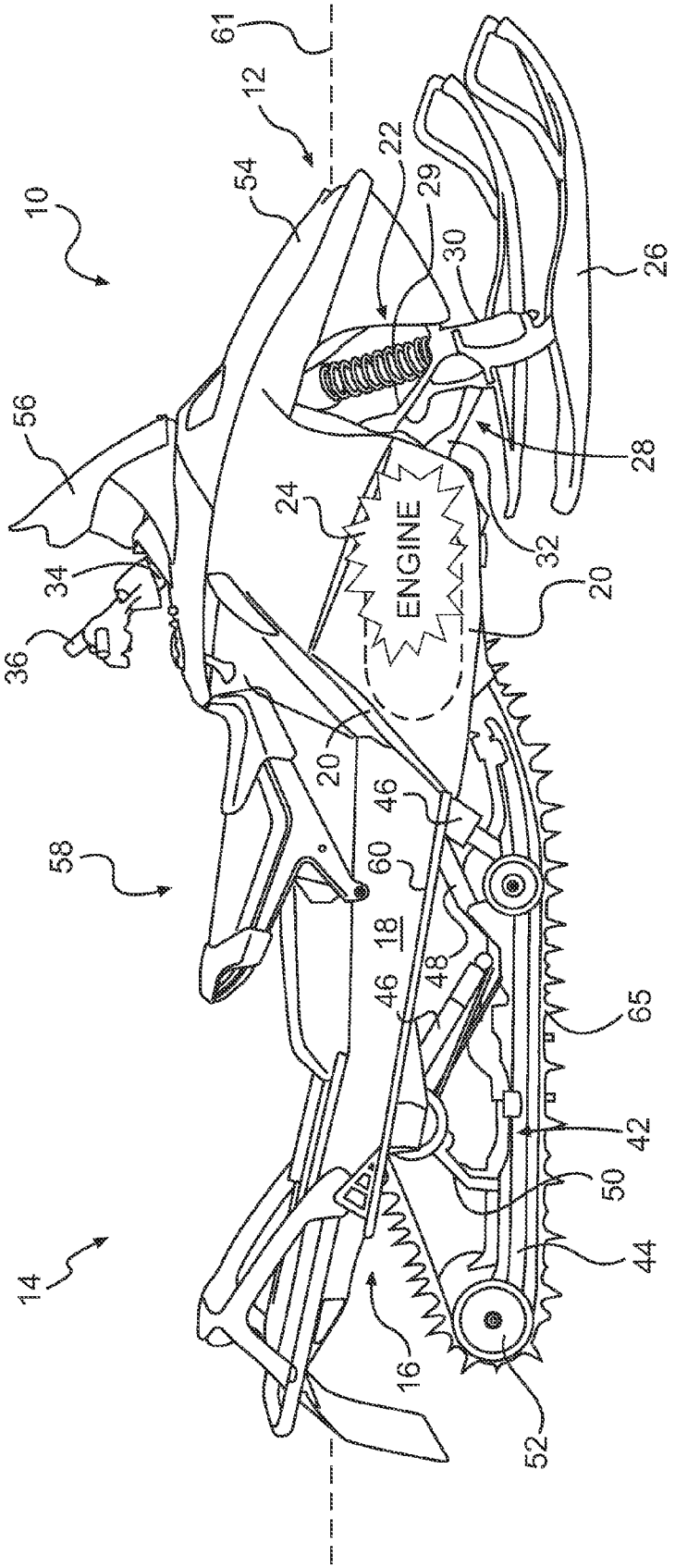
10
12
14
16
18
20
22
24
26
28
29
30
32
34
36
42
44
46
48
50
52
54
56
58
60
61
65
ENGINE

FIG. 1

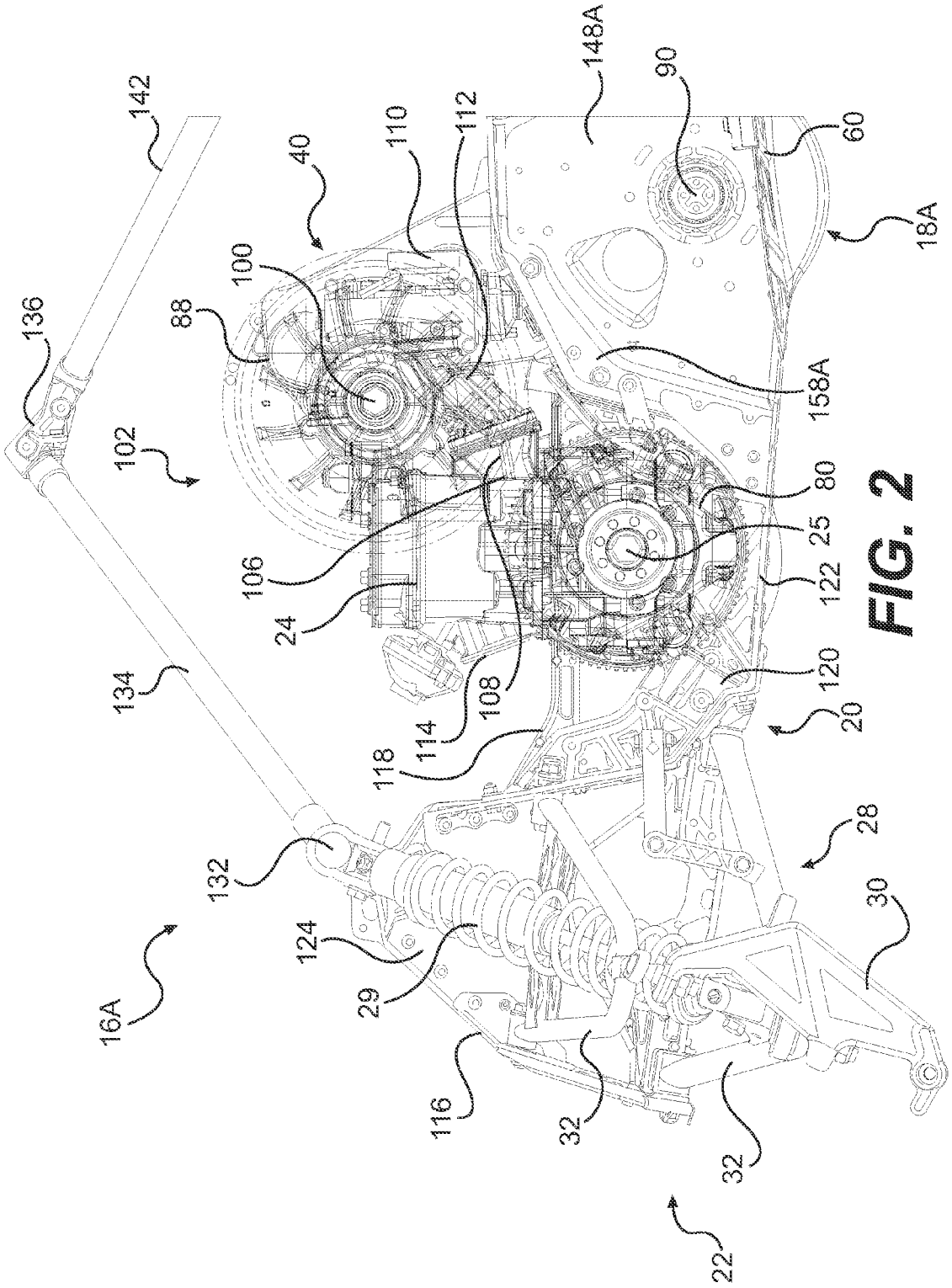
142
136
102
134
132
16A
124
29
116
32
32
22
30
28
20
120
122
25
80
158A
18A
60
90
148A
112
110
40
100
88
106
24
108
114
118

FIG. 2

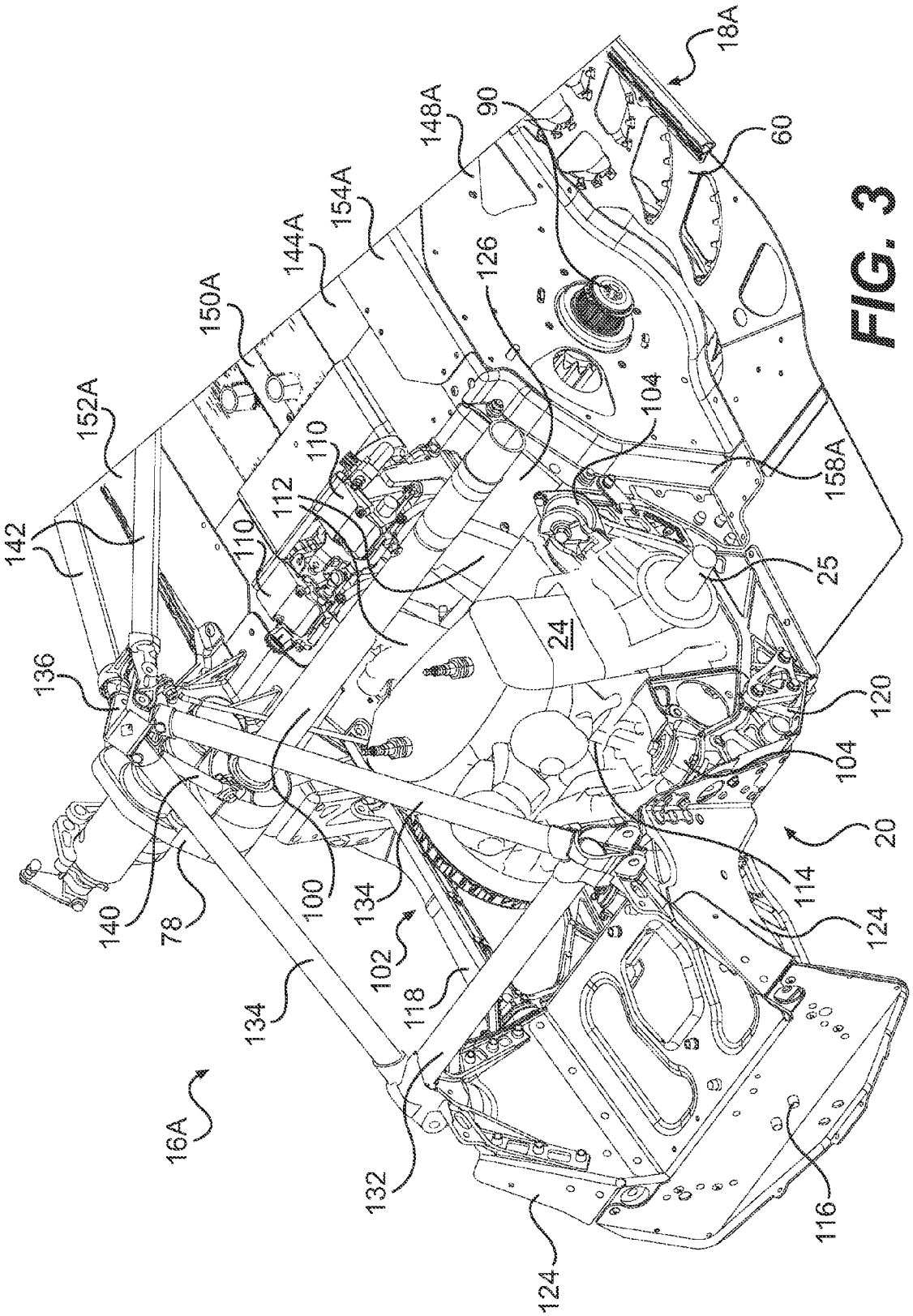
18A
148A
90
60
154A
144A
126
150A
152A
104
110
112
158A
142
110
25
24
136
120
104
20
100
134
114
140
78
124
102
118
134
16A
132
116
124

FIG. 3

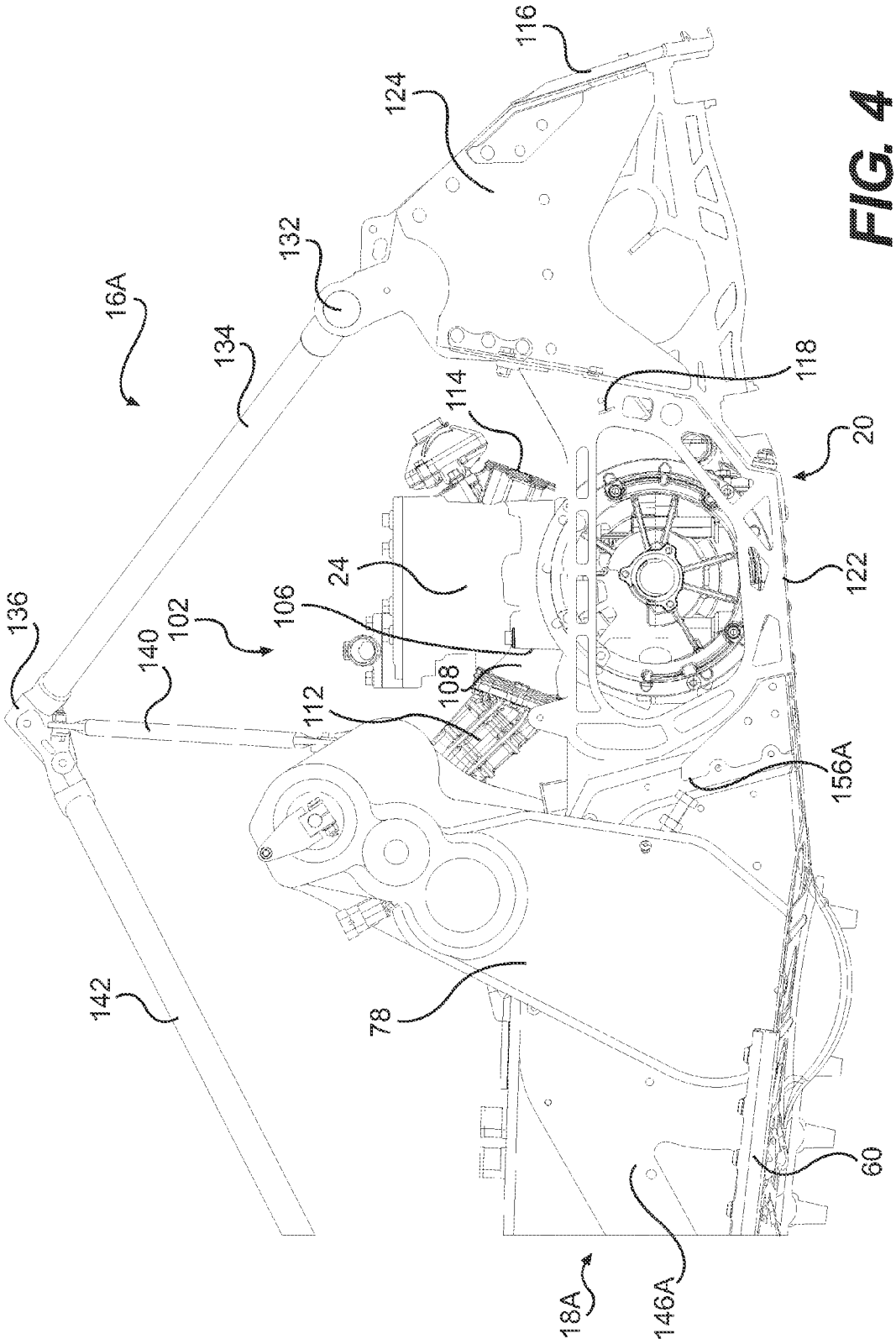
116
124
132
16A
134
118
114
20
24
122
136
102
106
140
108
112
156A
142
78
60
18A
146A

FIG. 4

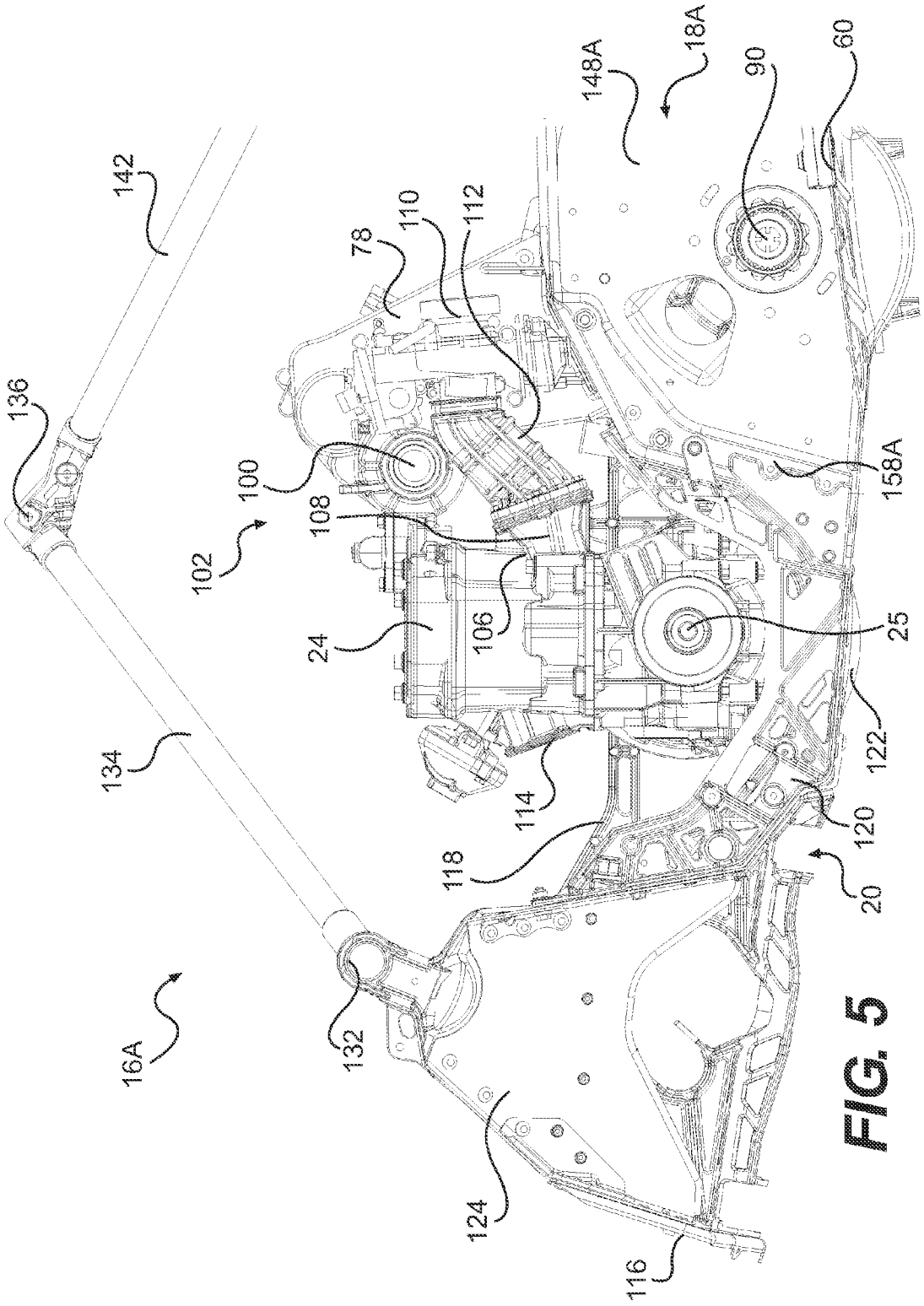
18A
148A
90
60
142
78
110
112
136
100
158A
108
102
106
24
25
122
134
114
120
118
20
16A
132
124
116

FIG. 5

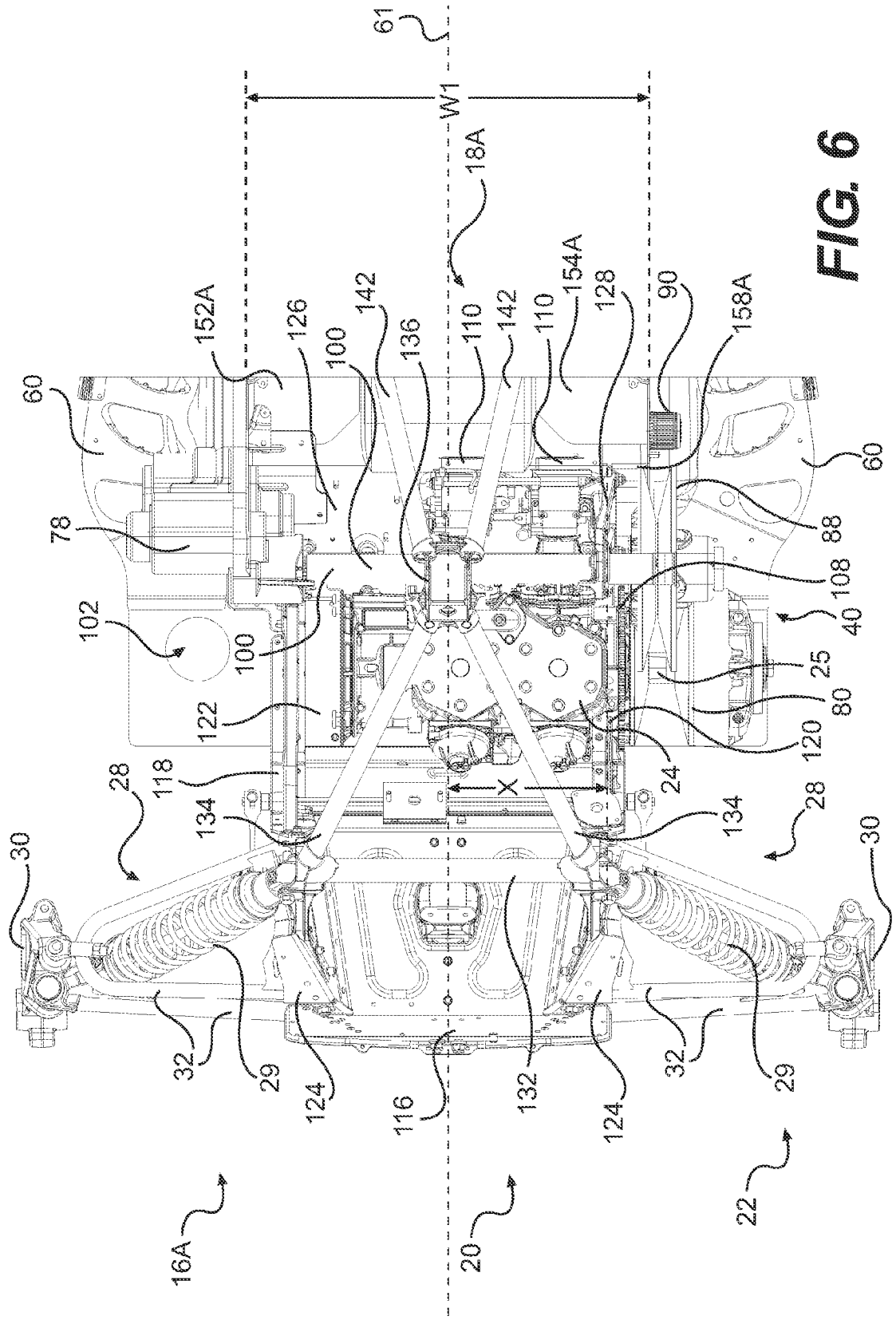
61
W1
18A
152A
126
100
142
136
110
142
110
154A
128
90
158A
60
60
78
88
108
102
100
40
25
80
122
120
24
118
X
28
134
134
28
30
30
32
29
124
116
132
124
32
29
16A
20
22

FIG. 6

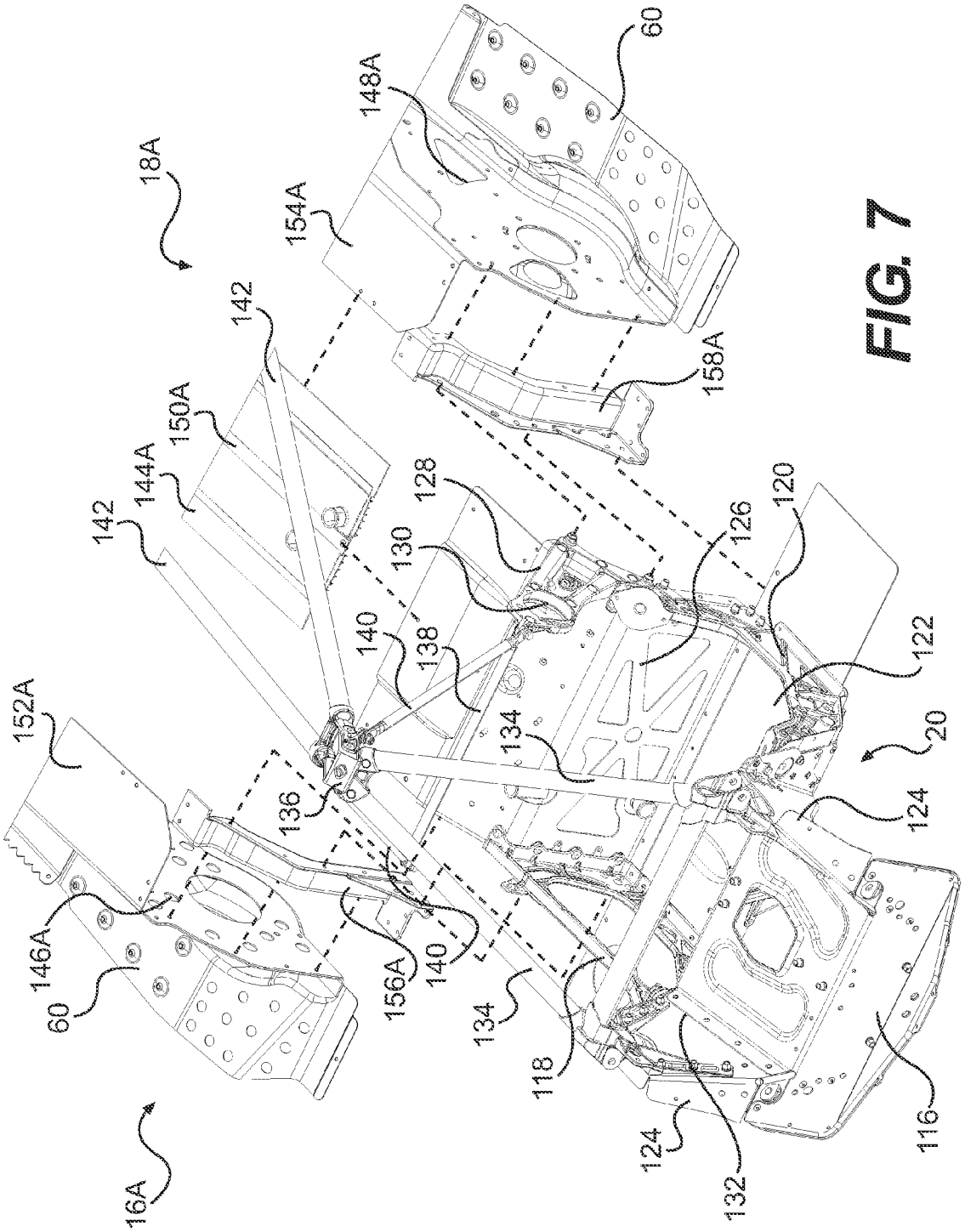
18A
148A
60
154A
158A
142
150A
144A
142
128
130
126
120
140
138
122
152A
134
20
136
124
146A
60
156A
140
134
118
124
132
116
16A

FIG. 7

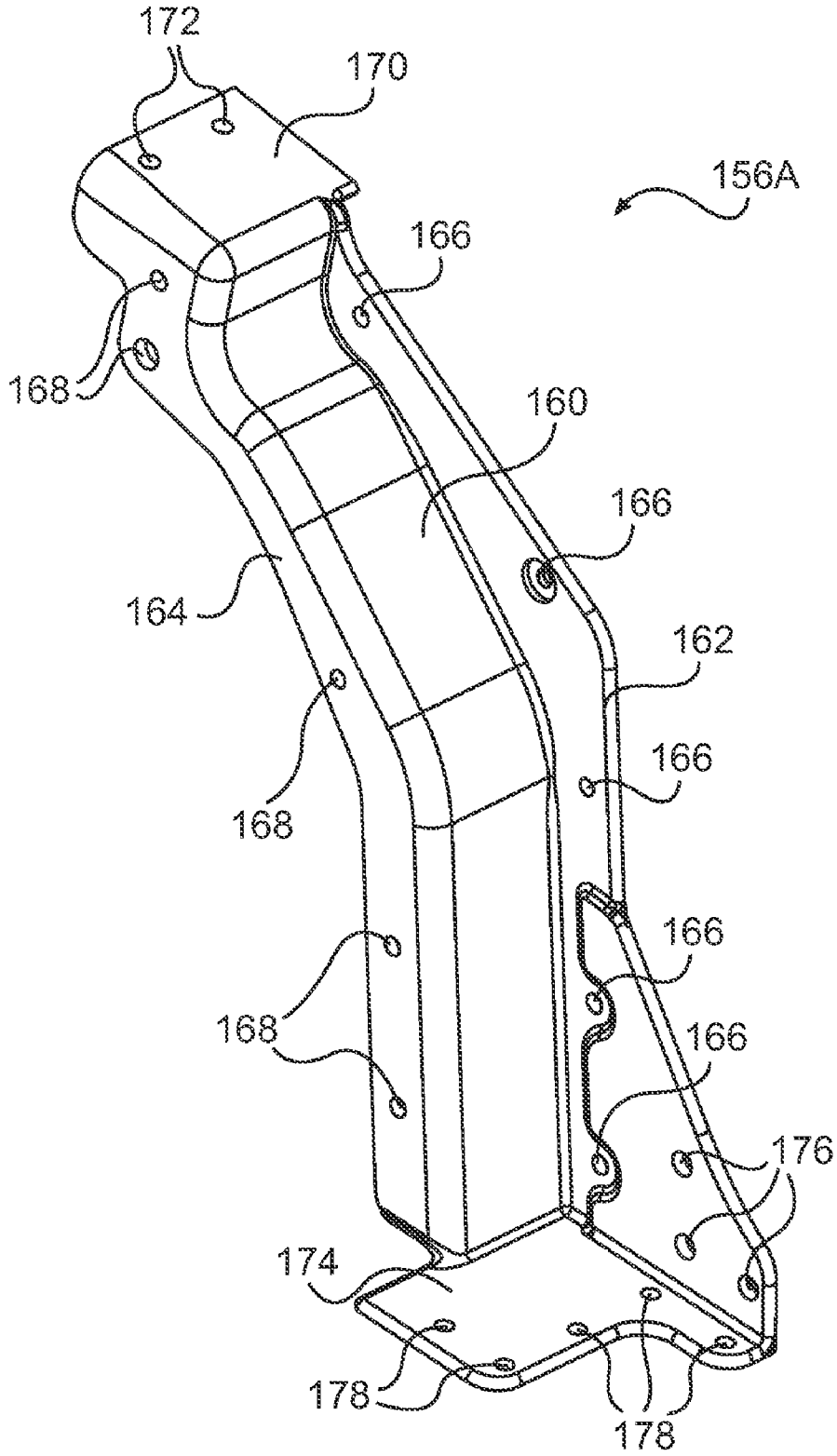
172
170
156A
166
168
160
166
164
162
166
168
166
168
166
176
174
178
178

FIG. 8

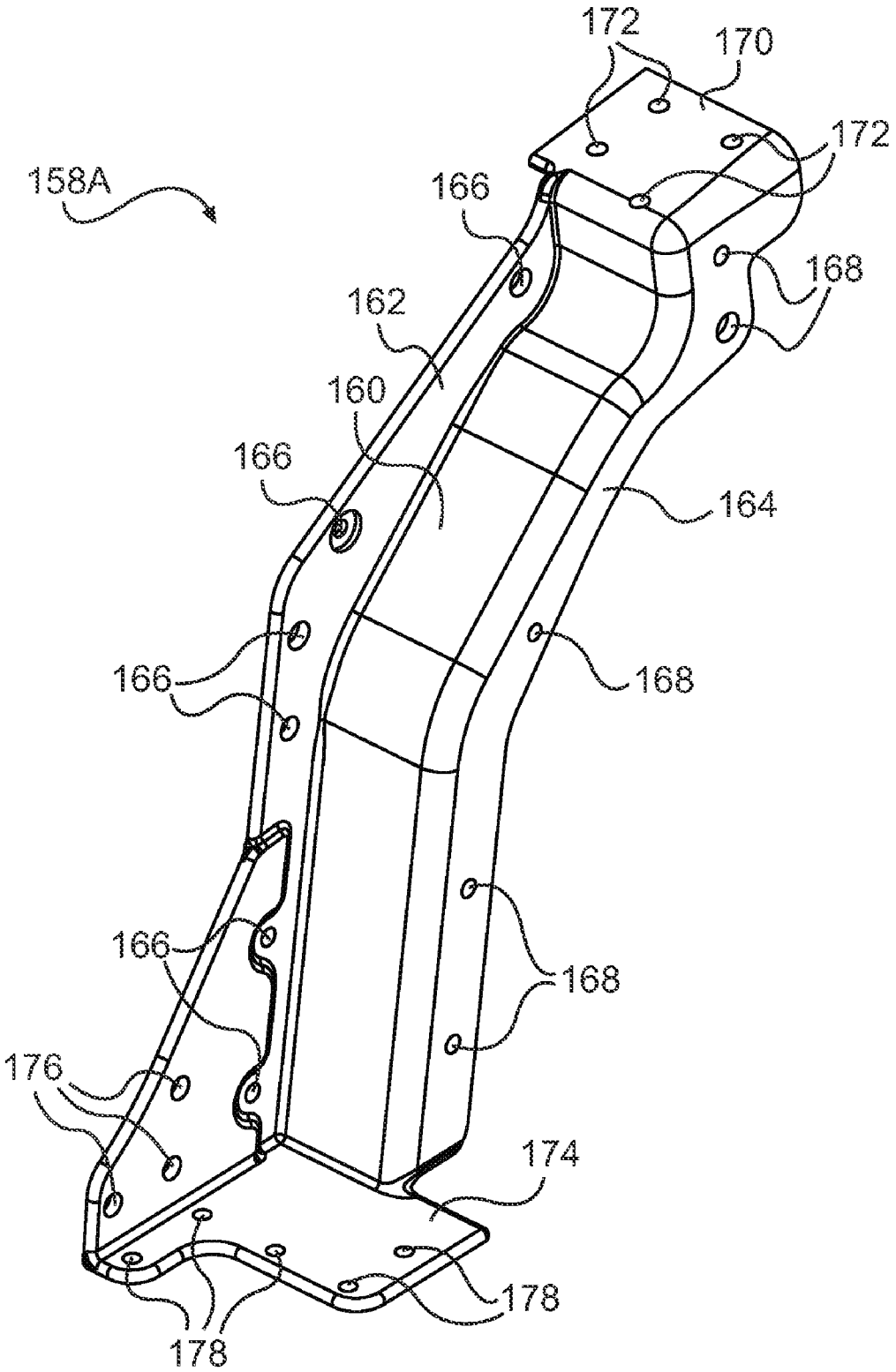
172
170
172
158A
166
168
162
160
166
164
166
168
166
168
176
174
178
178

FIG. 9

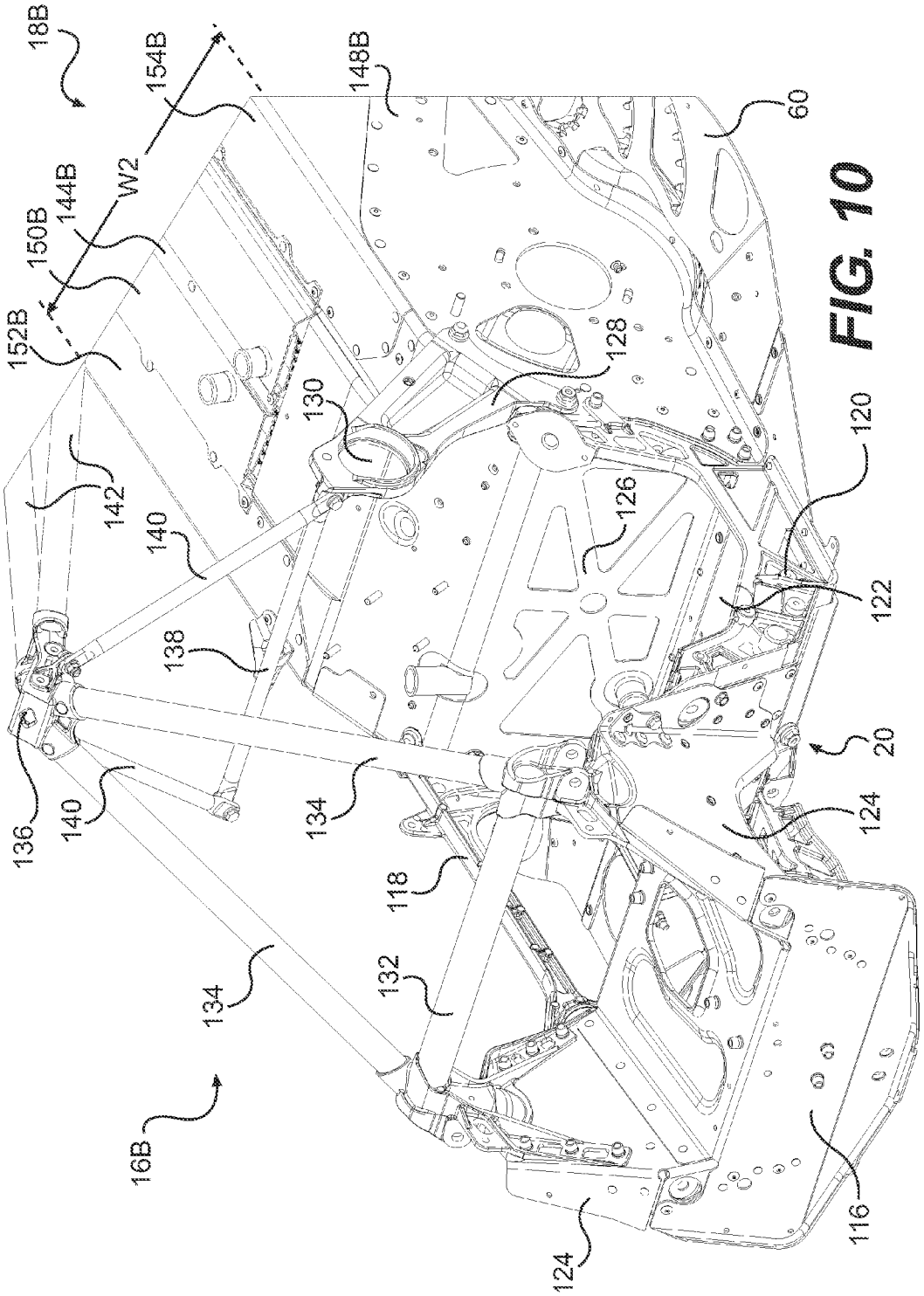
18B
154B
148B
60
W2
144B
150B
152B
128
130
120
142
126
140
122
138
20
136
140
134
124
118
134
132
16B
116
124

FIG. 10

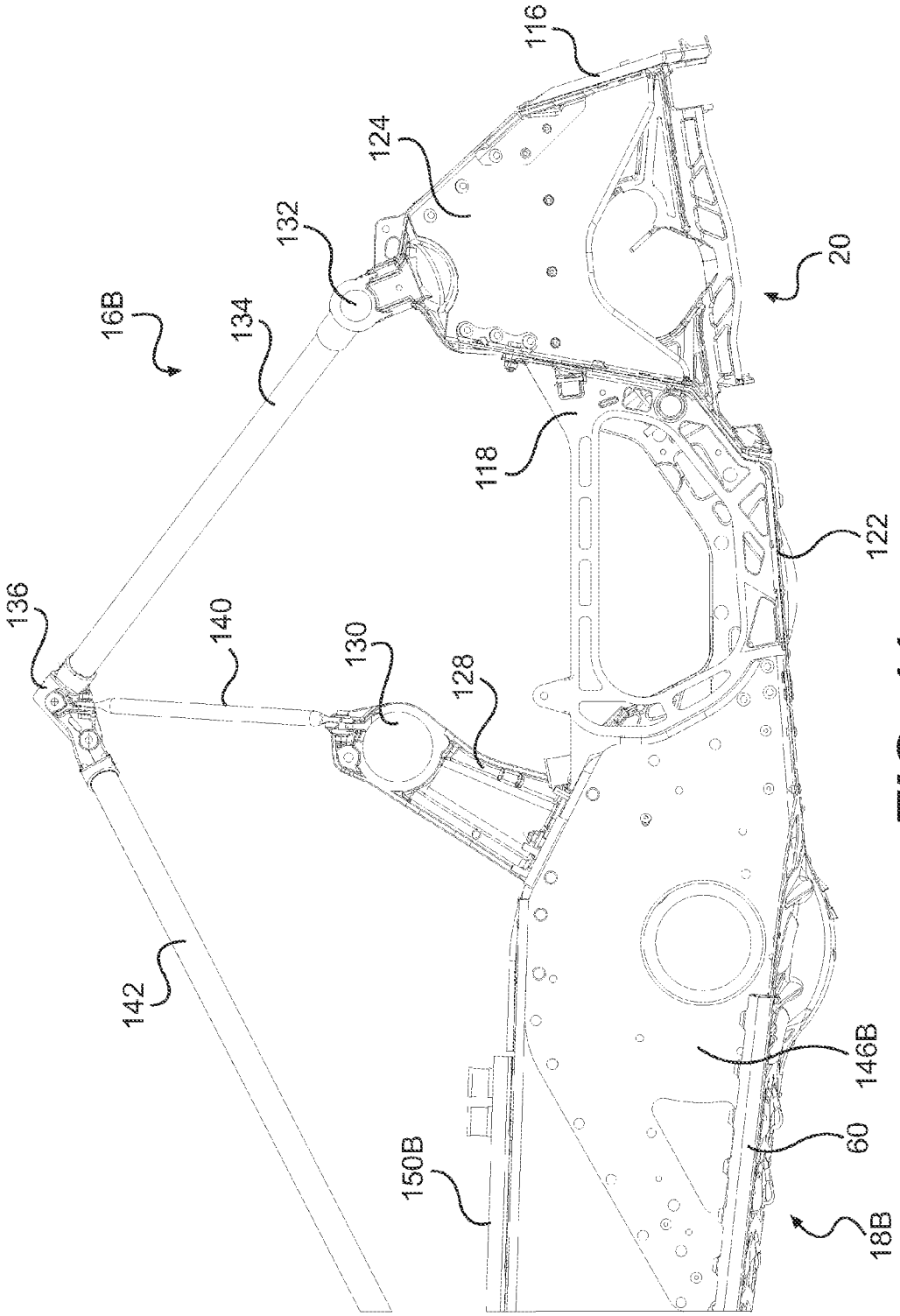
116
124
132
134
16B
20
118
122
136
140
130
128
142
146B
60
150B
18B

FIG. 11

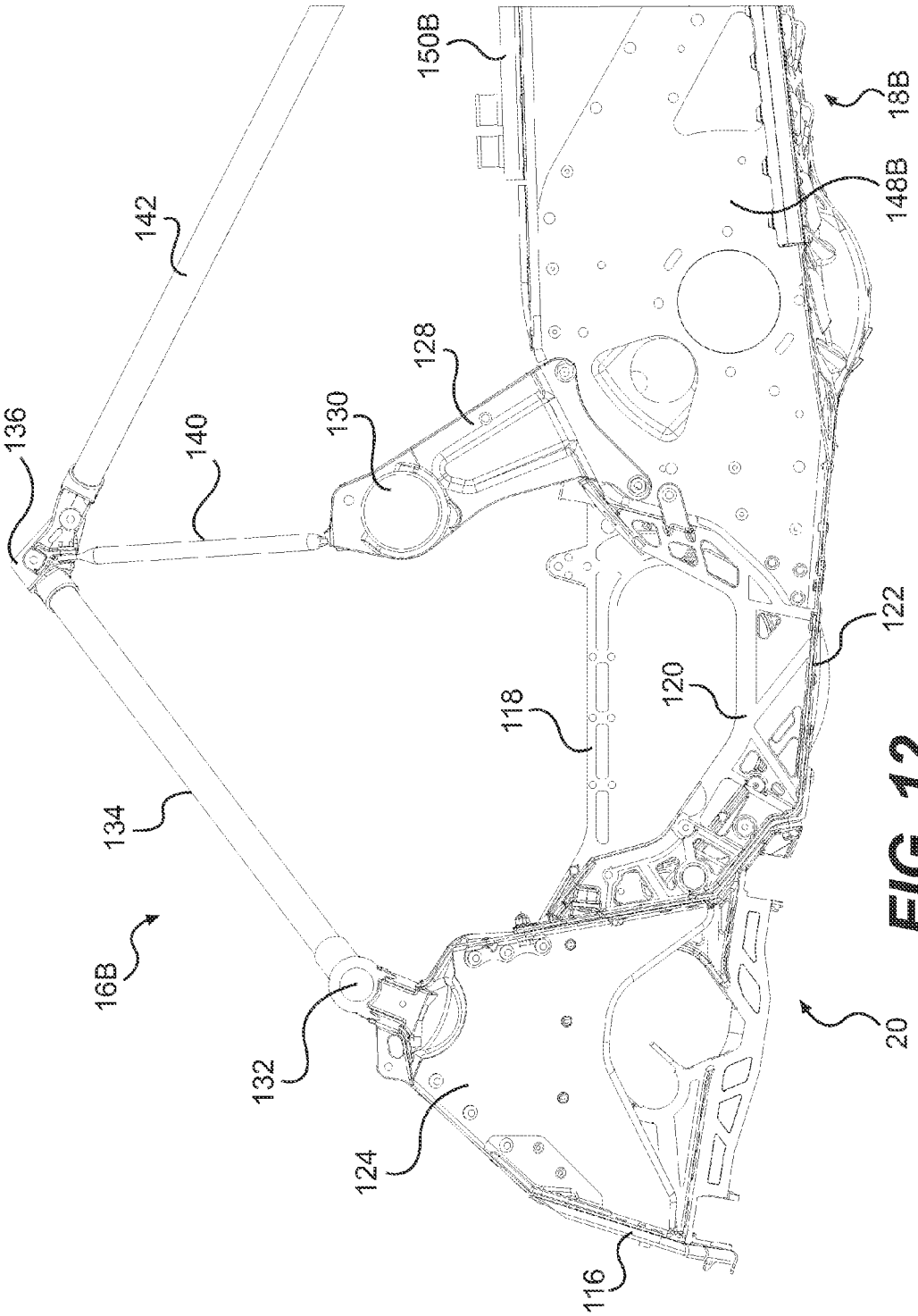
150B
18B
148B
142
128
130
136
140
122
120
118
134
16B
132
124
116
20

FIG. 12

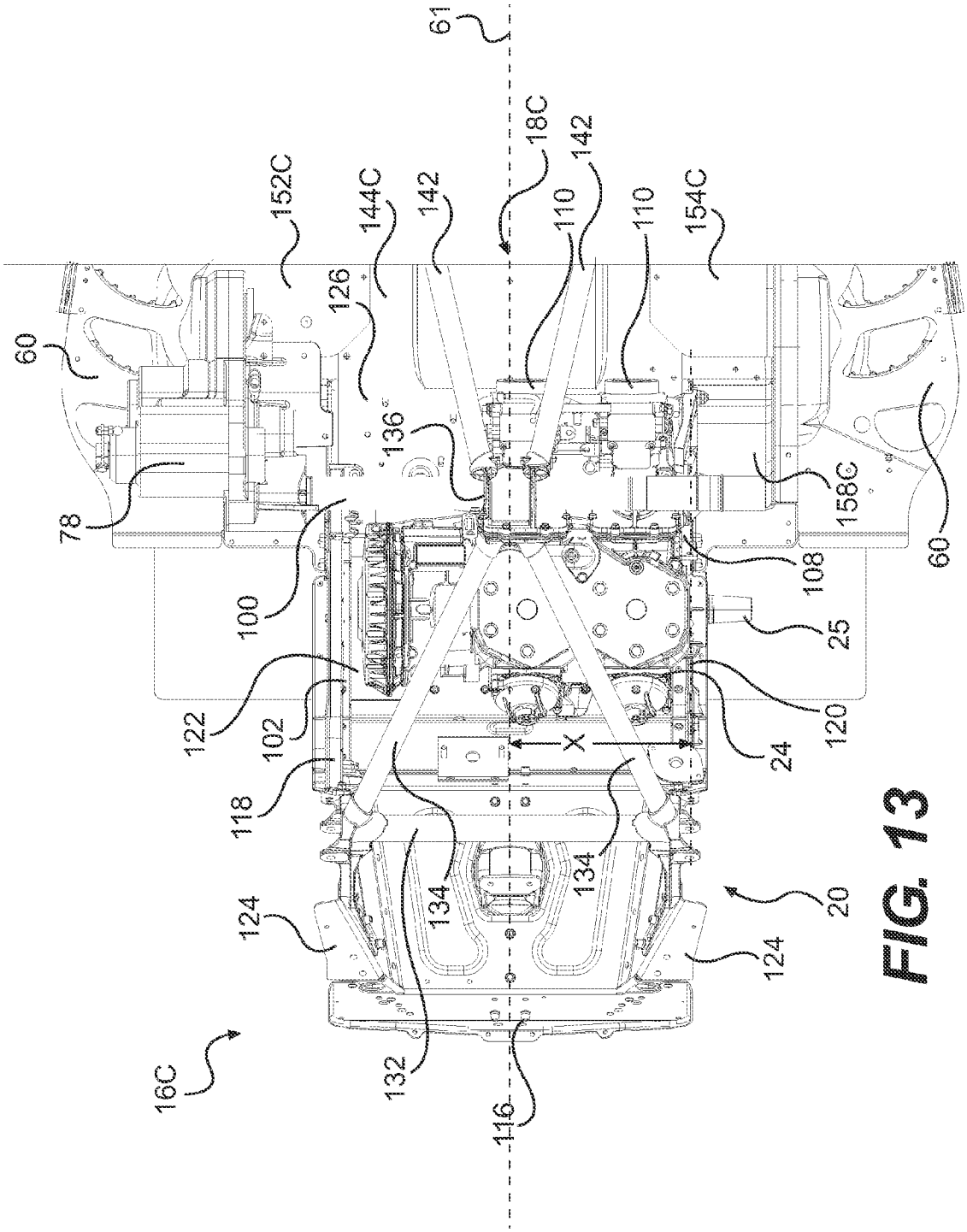
61
18C
142
152C
144C
142
110
110
154C
126
60
136
78
158C
60
100
108
25
122
102
120
24
X
118
134
134
124
20
124
132
116
16C

FIG. 13

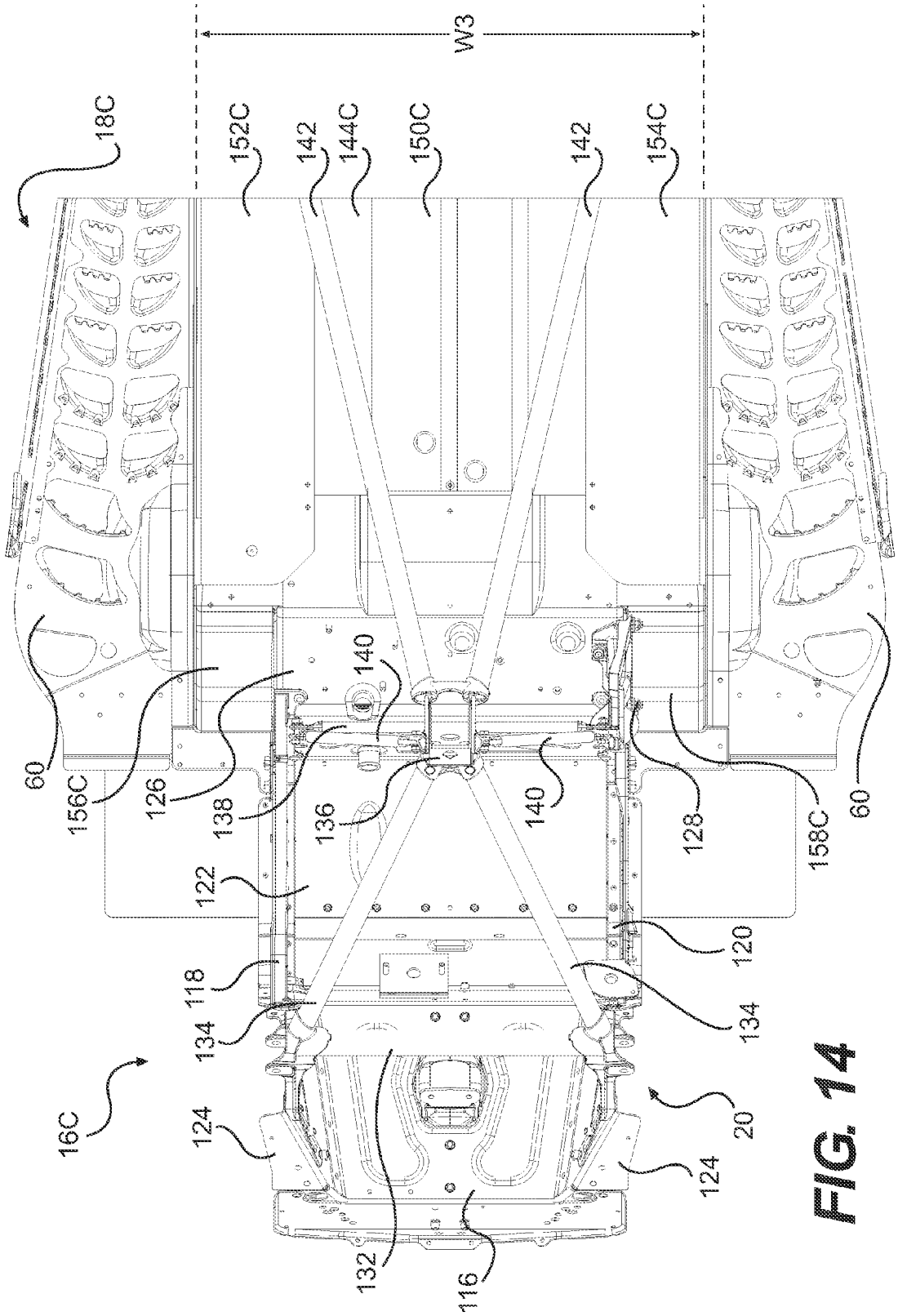
W3
18C
152C
142
144C
150C
142
154C
60
156C
126
138
140
136
140
128
158C
60
122
120
118
134
134
16C
124
20
124
132
116

FIG. 14

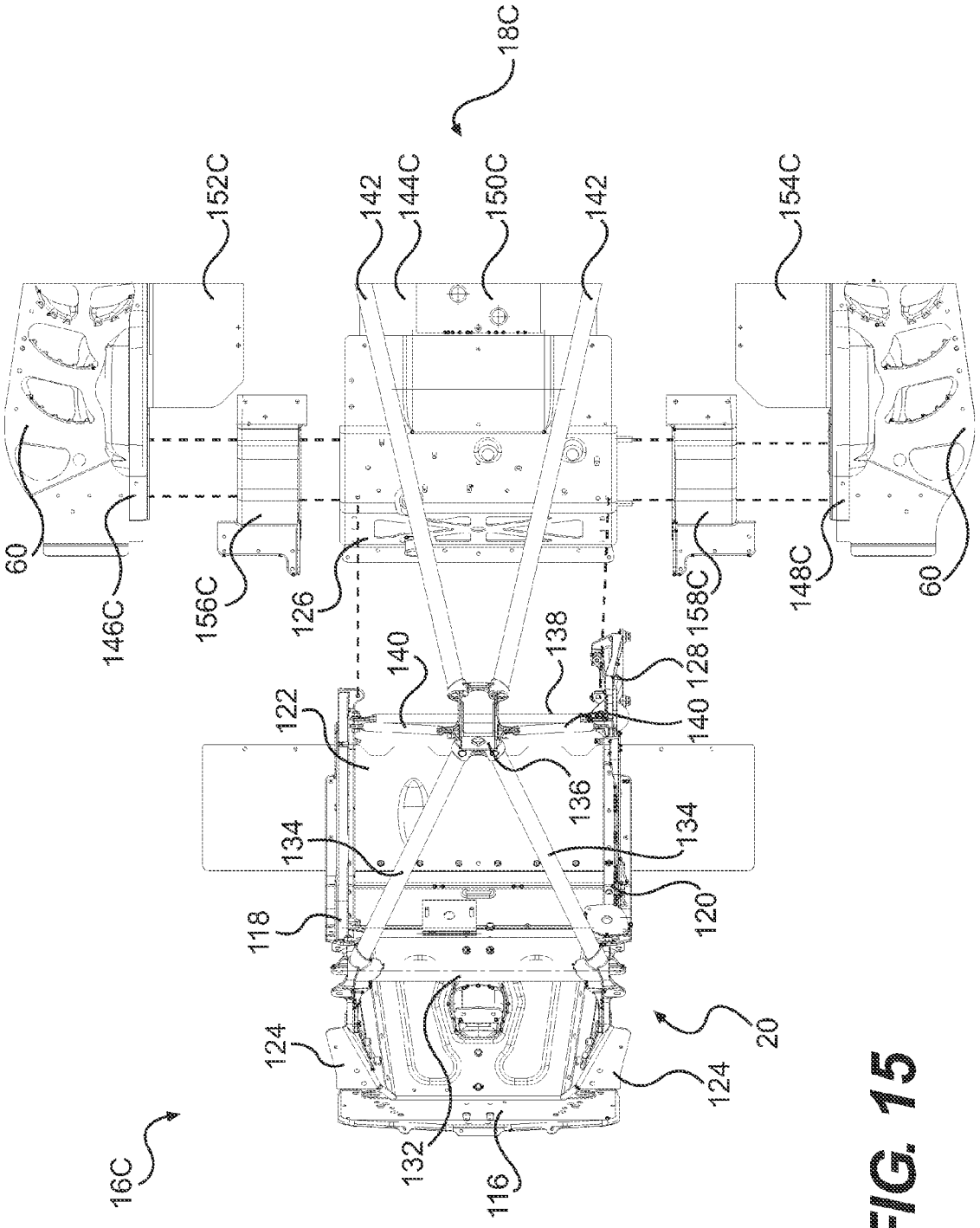
18C
152C
142
144C
150C
142
154C
60
146C
156C
126
158C
148C
60
140
138
128
122
140
136
134
134
118
120
124
20
124
132
116
16C

FIG. 15

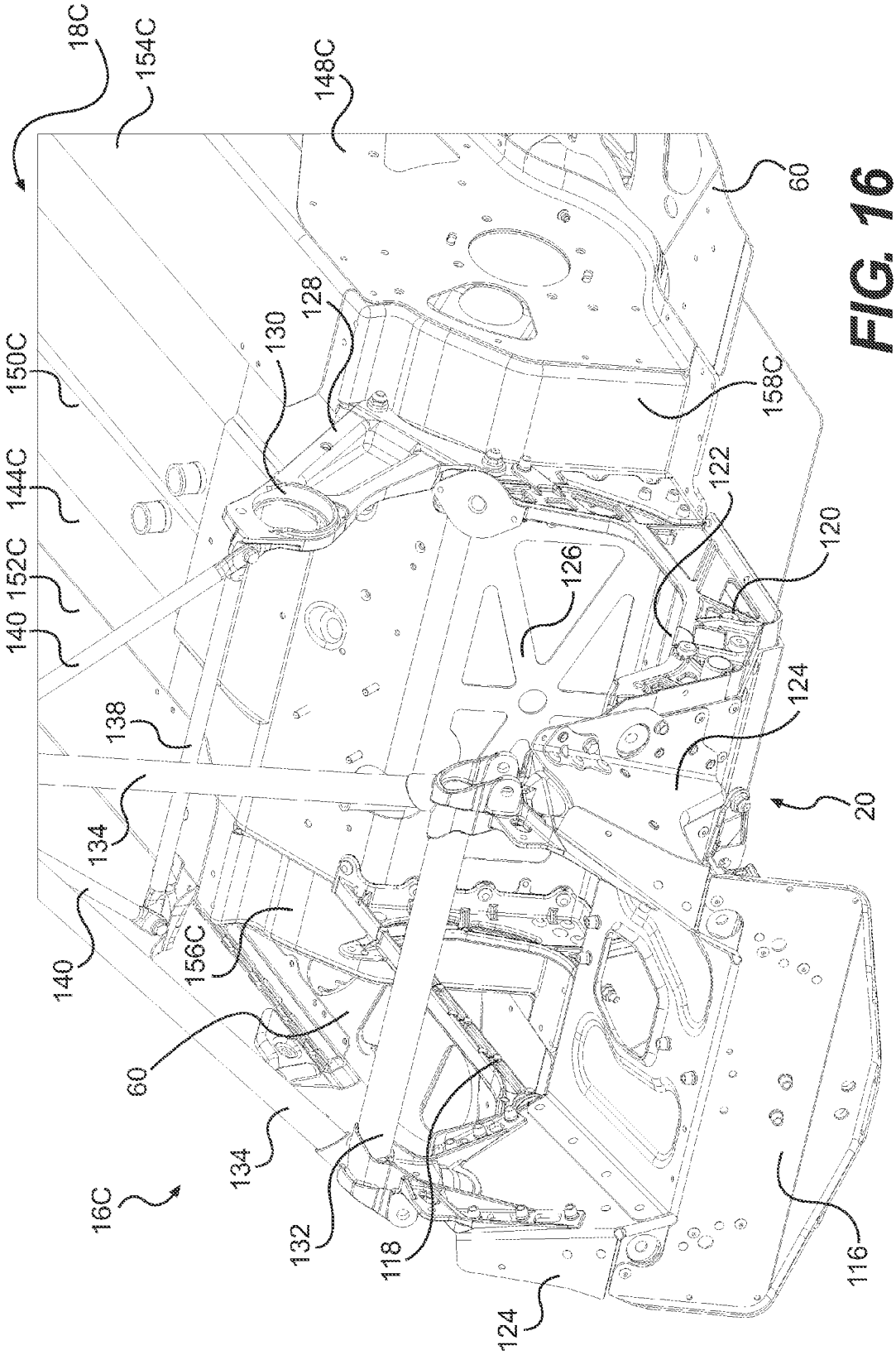
18C
154C
148C
60
150C
128
130
158C
144C
122
120
152C
126
140
138
124
20
134
140
156C
60
134
16C
132
118
124
116

FIG. 16

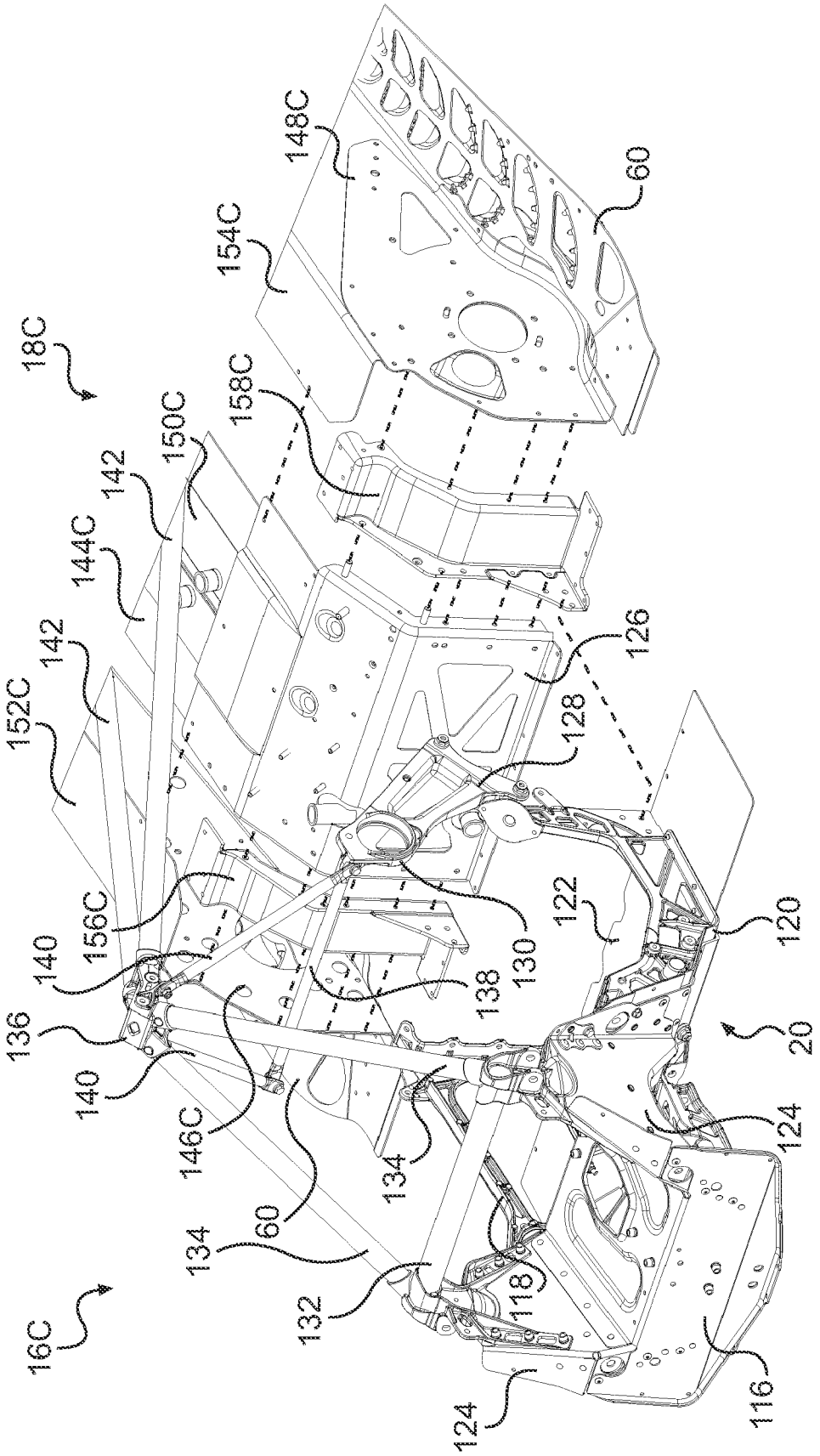
18C
148C
154C
60
158C
150C
142
144C
142
152C
126
128
156C
140
136
140
146C
60
134
134
132
118
16C
124
116
124
20
120
122
130
138

FIG. 17

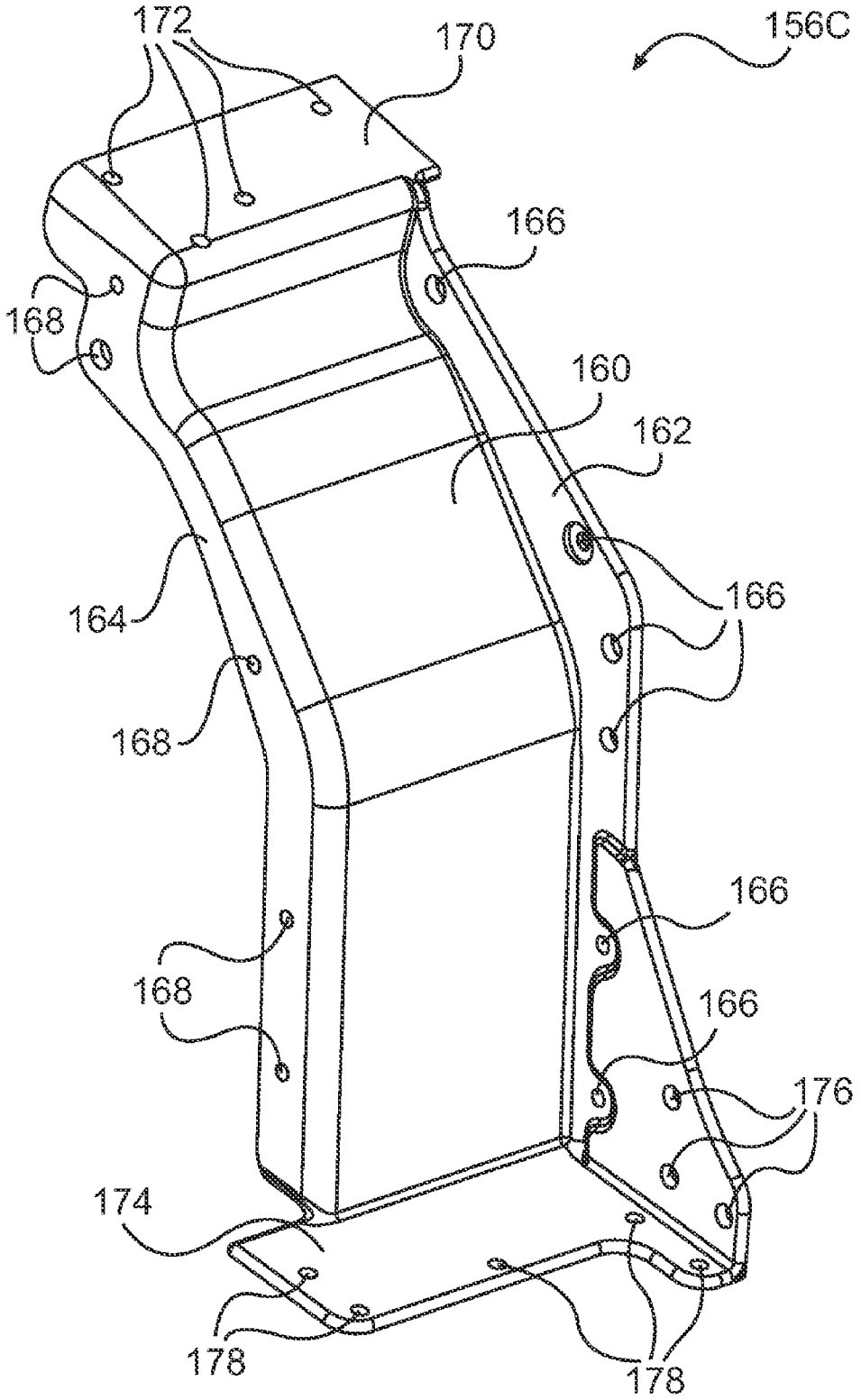
172
170
156C
166
168
160
162
164
166
168
166
168
166
176
174
178
178

FIG. 18

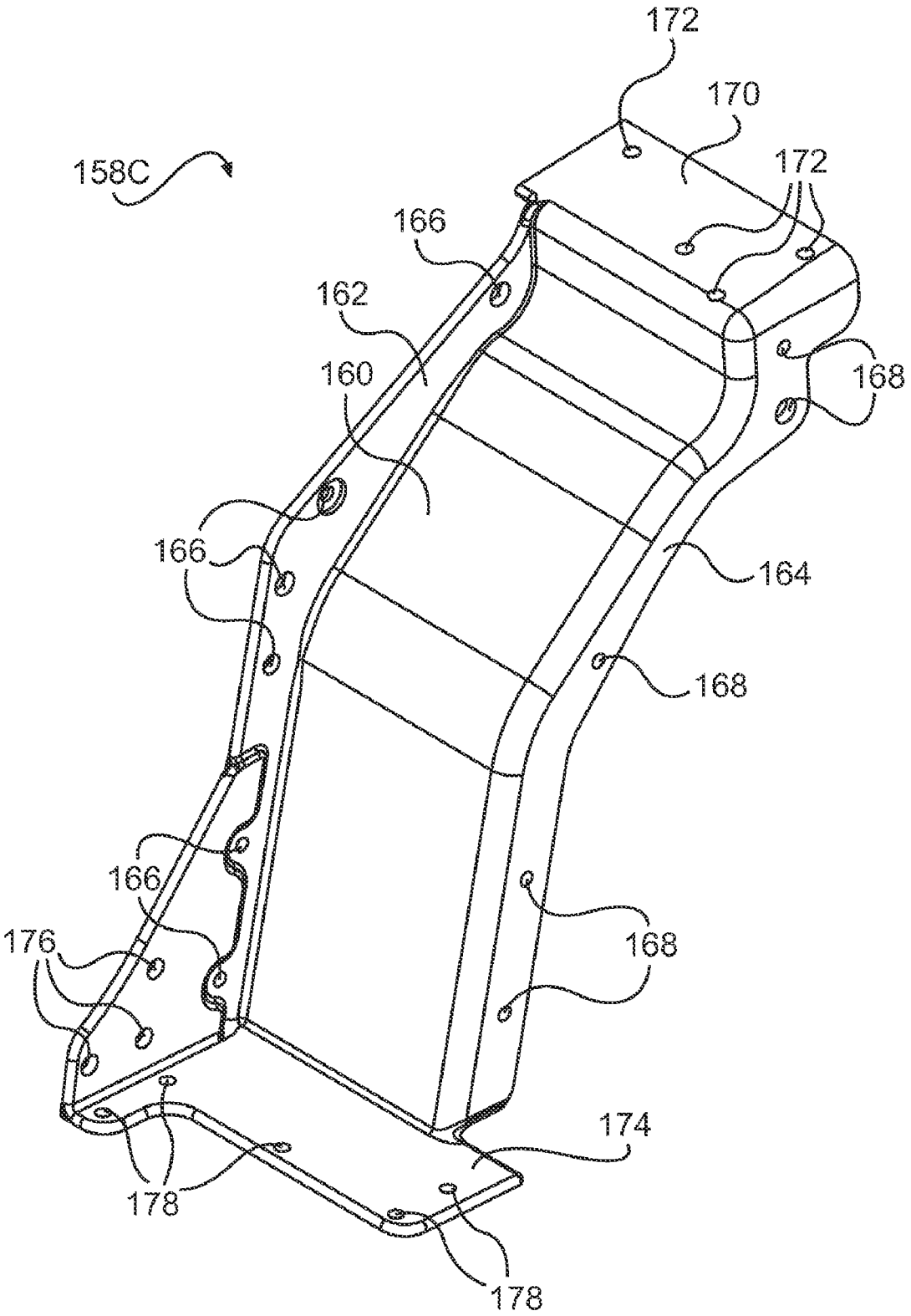
172
170
158C
172
166
162
160
168
166
164
168
166
176
168
174
178
178

FIG. 19

SNOWMOBILE AND FEATURES THEREOF ALLOWING FOR DIFFERENT TUNNEL WIDTHS

CROSS-REFERENCE

The present application is a continuation of U.S. patent application Ser. No. 12/476,791, filed Jun. 2, 2009, which is a division of U.S. patent application Ser. No. 11/671,694, filed Feb. 6, 2007, now U.S. Pat. No. 7,753,154, the entirety of both of which is incorporated herein by reference.

FIELD OF THE INVENTION

The present invention relates to a snowmobile and features thereof which allow for different tunnel widths.

BACKGROUND OF THE INVENTION

In snowmobiles, transverse mass centralization is important in order to have good handling characteristics. If too much mass is placed to one side of the snowmobile, the snowmobile will tend to sink into the snow on that side making it difficult to steer. This is particularly true when the snowmobile is used in soft powdered snow.

Conventionally, snowmobiles have a pair of skis and an endless drive track for propelling the snowmobile, both of which are mounted to a frame of the snowmobile. The frame includes an engine compartment which conventionally has left and right sides, a bottom, a rear (bulkhead), and a front portion. The engine compartment supports power pack components such as an engine, a tuned pipe, a muffler, a reduction gearing, and a continuously variable transmission (CVT). The frame also includes a tunnel rearward of the engine compartment below which the endless drive track is disposed. It is common to have snowmobiles having a tunnel width of 34.3 cm (13.5 inches), 38.1 cm (15 inches), 50.8 cm (20 inches), or 61 cm (24 inches), depending on the intended use of the snowmobile. The CVT has a drive pulley mounted to an output shaft of the engine, a driven pulley, and a belt looped around the two pulleys. The driven pulley is mounted to a countershaft and has a portion thereof which extends next to a side of the tunnel. The countershaft is operatively connected to the endless drive track so as to drive the endless drive track.

Since the engine is the component of the snowmobile which has the largest mass, it is important that the engine be centered as much as possible with respect to the longitudinal centerline of the snowmobile. However, this may not always be possible.

Since a portion of the driven pulley extends next to a side of the tunnel, as mentioned above, for two snowmobiles having different tunnel widths and identical power packs, the snowmobile having the larger tunnel width will need to have the engine more offset to one side of its longitudinal centerline than the other snowmobile, otherwise the driven pulley would interfere with the tunnel. This results in an unbalance in the transverse mass disposition. This unbalance can be counteracted by locating other components of the power pack on the other side of the longitudinal axis of the snowmobile. While this enables designers to design snowmobiles with different tunnel widths, it can be time consuming and costly since many parts of the power pack have to be relocated and/or redesigned each and every time a wider tunnel width is desired. Therefore each tunnel width requires its own power pack configuration. This can sometimes result in having to adopt different assembly procedures to accommodate the

different power pack configurations which may increase production time and therefore the overall manufacturing cost of the snowmobiles.

Therefore, there is a need for a family of snowmobiles where the members of the family can be designed with different tunnels, having different tunnel widths, while reducing the changes that have to be made to the power pack configuration as compared with conventional snowmobiles.

SUMMARY OF THE INVENTION

It is an object of the present invention to ameliorate at least some of the inconveniences present in the prior art.

It is also an object of the present invention to provide a family of snowmobiles where the members of the family have engine compartments with the same engine compartment configuration, but have tunnels with different tunnel widths.

In one aspect, the invention provides a family of snowmobiles having a first snowmobile and a second snowmobile. The first snowmobile has a first frame. The first frame includes a first engine compartment having an engine compartment configuration and a first tunnel rearward of the first engine compartment and having a first tunnel width. A first engine is disposed in the first engine compartment. A first countershaft traverses the first engine compartment. A first continuously variable transmission (CVT) operatively connects the first engine with the first countershaft. The first CVT is disposed on a first side of the first engine. A first reduction gearing is operatively connected to the first countershaft on a second side of the first engine opposite the first side. A first endless drive track is disposed below the first tunnel for propelling the first snowmobile. The first endless drive track is operatively connected to the first reduction gearing. A first pair of skis is connected to the first frame. The second snowmobile has a second frame. The second frame includes a second engine compartment having the engine compartment configuration, and a second tunnel rearward of the second engine compartment and having a second tunnel width being greater than the first tunnel width. A second engine is disposed in the second engine compartment. A second countershaft traverses the second engine compartment. A second CVT operatively connects the second engine and the second countershaft. The second CVT is disposed on a first side of the second engine. A second reduction gearing is operatively connected to the second countershaft on a second side of the second engine opposite the first side. A second endless drive track is disposed below the second tunnel for propelling the second snowmobile. The second endless drive track is operatively connected to the second reduction gearing. A second pair of skis is connected to the second frame.

In a further aspect, the first engine has engine physical characteristics and the second engine has the engine physical characteristics. The first countershaft has countershaft physical characteristics and the second countershaft has the countershaft physical characteristics. The first CVT has CVT physical characteristics and the second CVT has the CVT physical characteristics. The first reduction gearing has reduction gearing physical characteristics and the second reduction gearing has the reduction gearing physical characteristics.

In an additional aspect, the first engine, the first countershaft, the first CVT, and the first reduction gearing are disposed in a power pack configuration relative to the first engine compartment. The second engine, the second countershaft, the second CVT, and the second reduction gearing are disposed in the power pack configuration relative to the second engine compartment.

In a further aspect, the first endless drive track has a first track width and the second endless drive track has a second track width which is greater than the first track width.

In an additional aspect, the second snowmobile further includes a first spacer disposed between the second tunnel and a first side of the second engine compartment, and a second spacer disposed between the second tunnel and a second side of the second engine compartment.

In a further aspect, the second tunnel includes a central tunnel portion having a first side and a second side, a first tunnel side portion fastened to the first side of the central tunnel portion, and a second tunnel side portion fastened to the second side of the central tunnel portion.

In an additional aspect, the central tunnel portion comprises a heat exchanger.

In a further aspect, the first spacer is disposed between the first tunnel side portion and the first side of the second engine compartment. The second spacer is disposed between the second tunnel side portion and the second side of the second engine compartment.

In an additional aspect, the first CVT has a driven pulley disposed vertically higher than the first tunnel, and the second CVT has a driven pulley disposed vertically higher than the second tunnel.

In another aspect, the invention provides a snowmobile having a frame which includes an engine compartment, a tunnel rearward of the engine compartment, a first spacer disposed between the tunnel and a first side of the engine compartment, and a second spacer disposed between the tunnel and a second side of the engine compartment.

In another aspect, the invention provides a snowmobile having a frame. The frame includes an engine compartment having a first side and a second side, a tunnel rearward of the engine compartment, a first spacer disposed between the tunnel and the first side of the engine compartment, and a second spacer disposed between the tunnel and the second side of the engine compartment. An engine is disposed in the engine compartment. A countershaft traverses the engine compartment. A continuously variable transmission (CVT) operatively connects the engine with the countershaft. The CVT being disposed on a first side of the engine. An endless drive track is disposed below the tunnel for propelling the snowmobile. The endless drive track is operatively connected to the countershaft. A front suspension is connected to the frame. A pair of skis is connected to the front suspension.

In an additional aspect, the snowmobile also has a reduction gearing operatively connected to the countershaft on a second side of the engine opposite the first side. The endless drive track is operatively connected to the reduction gearing.

In a further aspect, the tunnel includes a central tunnel portion having a first side and a second side, a first tunnel side portion fastened to the first side of the central tunnel portion, and a second tunnel side portion fastened to the second side of the central tunnel portion.

In an additional aspect, the central tunnel portion comprises a heat exchanger.

In a further aspect, the first spacer is disposed between the first tunnel side portion and the first side of the engine compartment, and the second spacer is disposed between the second tunnel side portion and the second side of the engine compartment.

In an additional aspect, the CVT has a driven pulley disposed vertically higher than the tunnel.

In a further aspect, the front suspension includes two pairs of A-arms.

In another aspect, the invention provides a method of manufacturing a snowmobile frame having spacers between the tunnel and the sides of the engine compartment.

In another aspect, the invention provides a method of manufacturing a snowmobile frame. The method comprises providing an engine compartment having a first side and a second side, disposing a tunnel rearwardly of the engine compartment, inserting a first spacer between the tunnel and the first side of the engine compartment, and inserting a second spacer between the tunnel and the second side of the engine compartment.

In an additional aspect, the tunnel comprises a central tunnel portion having a first side and a second side, a first tunnel side portion, and a second tunnel side portion. The method further comprises fastening the first tunnel side portion to the first side of the central tunnel portion, and fastening the second tunnel side portion to the second side of the central tunnel portion.

In a further aspect, the first spacer is inserted between the first tunnel side portion and the first side of the engine compartment, and the second spacer is inserted between the second tunnel side portion and the second side of the engine compartment.

In an additional aspect, the tunnel has a tunnel width and the engine compartment has an engine compartment width. The tunnel width is greater than the engine compartment width.

In another aspect, the invention provides a snowmobile having a countershaft traversing an engine compartment of the snowmobile, where the countershaft is disposed rearwardly of the engine, vertically higher than an air intake opening of the engine, and forwardly of an air intake controller.

In another aspect, the invention provides a snowmobile having a frame. The frame includes an engine compartment and a tunnel rearward of the engine compartment. An engine is disposed in the engine compartment. The engine has at least one air intake opening on a rear side thereof. An air intake controller is disposed rearwardly of the engine and fluidly communicates with the air intake opening. A countershaft traverses the engine compartment. The countershaft is disposed rearwardly of the engine, vertically higher than the air intake opening, and forwardly of the air intake controller. A continuously variable transmission (CVT) operatively connects the engine with the countershaft. An endless drive track is disposed below the tunnel for propelling the snowmobile. The first endless drive track is operatively connected to the countershaft. A front suspension is connected to the frame. A pair of skis is connected to the front suspension.

In an additional aspect, the air intake controller is one of a carburetor and a throttle body.

In a further aspect, the CVT is disposed on a first side of the engine. The snowmobile also has a reduction gearing operatively connected to the countershaft on a second side of the engine opposite the first side.

In an additional aspect, the engine has an output shaft. The snowmobile also has a drive axle disposed in the tunnel. The drive axle is operatively connected to the countershaft for driving the endless drive track.

In a further aspect, the countershaft is disposed rearwardly of the output shaft and forwardly of the drive axle.

In an additional aspect, the countershaft defines a countershaft axis. The countershaft axis is generally vertically aligned with a top portion of the engine.

In another aspect, the invention provides a family of snowmobiles where frames of the members of the family have engine compartments with the same engine compartment

configuration, but have tunnels with different tunnel widths, and where the distance from a side of the engine to a longitudinal centerline of the frame for each member of the family is the same.

In another aspect, the invention provides a family of snowmobiles having a first snowmobile and a second snowmobile. The first snowmobile has a first frame. The first frame includes a first longitudinal centerline, a first engine compartment having a first engine compartment configuration, and a first tunnel rearward of the first engine compartment. The first tunnel has a first tunnel width. A first engine is disposed in the first engine compartment. The first engine has engine characteristics, a first side and a second side opposite the first side. The first side is disposed a first distance from the first longitudinal centerline. A first countershaft traverses the first engine compartment. A first continuously variable transmission (CVT) operatively connects the first engine with the first countershaft. The first CVT is disposed on the first side of the first engine. A first reduction gearing is operatively connected to the first countershaft on the second side of the first engine. A first endless drive track is disposed below the first tunnel for propelling the first snowmobile. The first endless drive track is operatively connected to the first reduction gearing. A first pair of skis is connected to the first frame. The second snowmobile has a second frame. The second frame includes a second longitudinal centerline, a second engine compartment having a second engine compartment configuration, and a second tunnel rearward of the second engine compartment. The second tunnel has a second tunnel width being greater than the first tunnel width. A second engine is disposed in the second engine compartment. The second engine has the engine characteristics, a first side and a second side opposite the first side. The first side is disposed a second distance from the second longitudinal centerline. The second distance is the same as the first distance. A second countershaft traverses the second engine compartment. A second CVT operatively connects the second engine and the second countershaft. The second CVT is disposed on the first side of the second engine. A second reduction gearing is operatively connected to the second countershaft on the second side of the second engine. A second endless drive track is disposed below the second tunnel for propelling the second snowmobile. The second endless drive track is operatively connected to the second reduction gearing. A second pair of skis is connected to the second frame.

In a further aspect, the first endless drive track has a first track width, and the second endless drive track has a second track width being greater than the first track width.

In an additional aspect, the second snowmobile also has a first spacer disposed between the second tunnel and a first side of the second engine compartment, and a second spacer disposed between the second tunnel and a second side of the second engine compartment.

In a further aspect, the first CVT has a driven pulley disposed vertically higher than the first tunnel, and the second CVT has a driven pulley disposed vertically higher than the second tunnel.

In another aspect, the invention provides a method of manufacturing a snowmobile frame and power pack by providing an engine compartment, selecting a tunnel from a group of tunnels each having a different width, disposing the selected tunnel rearwardly of the engine compartment, and disposing the power pack in the engine compartment.

In another aspect, the invention provides a method of manufacturing a snowmobile frame and power pack. The power pack includes an engine, a CVT on a first side of the engine, the CVT having a driven pulley, a reduction gearing on a second side of the engine opposite the first side, and a countershaft operatively connecting the driven pulley with the reduction gearing. The method comprises providing an engine compartment having a engine compartment configuration adapted to receive the power pack, selecting one of a first tunnel and a second tunnel, the first tunnel having a first tunnel width, the second tunnel having a second tunnel width, the second tunnel width being different from the first tunnel width, disposing the selected one of the first tunnel and the second tunnel rearwardly of the engine compartment, and disposing the power pack in the engine compartment, wherein the driven pulley is disposed vertically above the selected one of the first tunnel and the second tunnel.

In an additional aspect, disposing the power pack in the engine compartment includes locating the driven pulley at a first distance from a longitudinal centerline of the frame when the first tunnel is selected, and locating the driven pulley at a second distance from the longitudinal centerline of the frame when the second tunnel is selected. The first distance is the same as the second distance.

In a further aspect, the method further comprises inserting a first spacer between the selected one of the first tunnel and the second tunnel and a first side of the engine compartment, and inserting a second spacer between the selected one of the first tunnel and the second tunnel and a second side of the engine compartment.

For purposes of this application, the term "configuration" means the relative arrangement of components. For example, the power pack configuration refers to the arrangement of the engine, CVT, reduction gearing, and other power pack components relative to each other. The terms "physical characteristics" mean the features of a component. For example, the engine physical characteristics of an engine could include, but are not limited to, the number of cylinders, the type of cycle it operates on (two-cycle or four cycle), the engine's dimensions, and the engine's horsepower. The terms "power pack" mean the combination of an engine and components for transmitting power from the engine. These components could include, but are not limited to, one or more of a CVT, a reduction gearing, and a shaft. The term "tunnel" means the rear portion of the frame of a snowmobile that has a generally inverted U-shaped transverse cross-section. The tunnel houses at least a portion of the endless drive track of the snowmobile therein and the seat of the snowmobile is at least partially disposed on the tunnel.

Embodiments of the present invention each have at least one of the above-mentioned aspects, but do not necessarily have all of them. It should be understood that some aspects of the present invention that have resulted from attaining the above-mentioned objects may not satisfy these objects and/or may satisfy other objects not specifically recited herein.

Additional and/or alternative features, aspects, and advantages of embodiments of the present invention will become apparent from the following description, the accompanying drawings, and the appended claims.

BRIEF DESCRIPTION OF THE DRAWINGS

For a better understanding of the present invention, as well as other aspects and further features thereof, reference is made to the following description which is to be used in conjunction with the accompanying drawings, where:

FIG. **1** is a right side elevation view of a snowmobile in accordance with the invention;

FIG. **2** is a left side elevation view of a forward portion of a first frame and power pack in accordance with aspects of the invention, with portions of the first frame removed for clarity;

FIG. **3** is a perspective view, taken from a front, left side, of the forward portion of the first frame and power pack of FIG. **2**, with portions of the first frame and the CVT removed for clarity;

FIG. **4** is a right side elevation view of the forward portion of the first frame and power pack of FIG. **2**, with the CVT removed for clarity;

FIG. **5** is a left side elevation view of the forward portion of the first frame and power pack of FIG. **2**, with portions of the first frame and the CVT removed for clarity;

FIG. **6** is a top view of the forward portion of the first frame, power pack, and front suspension of FIG. **2**, with portions of the first frame removed for clarity;

FIG. **7** is an exploded view of the forward portion of the first frame of FIG. **2**;

FIG. **8** is a perspective view of a right spacer of the first frame of FIG. **2**;

FIG. **9** is a perspective view of a left spacer of the first frame of FIG. **2**;

FIG. **10** is a perspective view, taken from a front, left side, of a forward portion of a second frame in accordance with aspects of the invention;

FIG. **11** is a right side elevation view of the forward portion of the second frame of FIG. **10**;

FIG. **12** is a left side elevation view of the forward portion of the second frame of FIG. **10**;

FIG. **13** is a top view of a forward portion of a third frame and power pack of in accordance with aspects of the present invention, with portions of the third frame and the CVT removed for clarity;

FIG. **14** is a top view of the forward portion of the third frame of FIG. **13**;

FIG. **15** is an exploded top view of the forward portion of the third frame of FIG. **13**;

FIG. **16** is a perspective view, taken from a front, left side, of the forward portion of the third frame of FIG. **13**;

FIG. **17** is an exploded perspective view, taken from a front, left side, of the forward portion of the third frame of FIG. **13**;

FIG. **18** is a perspective view of a right spacer of the third frame of FIG. **13**; and

FIG. **19** is a perspective view of a left spacer of the third frame of FIG. **13**.

DETAILED DESCRIPTION OF THE PREFERRED EMBODIMENTS

Aspects of the present invention relate to a family of snowmobiles. However, since each member of the family of snowmobiles has common features only one snowmobile **10** will be described herein in detail for simplicity. Even though only one snowmobile **10** is described, it should be understood that features of members of the snowmobile family that are not directly related to the invention, such as the skis or seat for example, may be different from one member to the other without deviating from the invention.

As will become apparent from the following description, the members of the family each have a different frame **16**A (FIGS. **2** to **9**), **16**B (FIG. **10** to **12**), or **16**C (FIGS. **13** to **19**) but other features, such as a power pack **102**, can remain generally the same. As will also become apparent from the following description, the different frames **16**A, **16**B, and **16**C each have a corresponding tunnel **18**A, **18**B, and **18**C, each of which has a different tunnel width to accommodate different widths of endless track **65**, but each have an engine compartment **20** which has generally the same engine compartment configuration as the others. It should be understood that throughout this application the term "same" does not require the components referred to as such to be exactly identical and that minor variations between these elements are contemplated. By way of non-limiting example, the frames **16**A, **16**B, and **16**C could have different bracket physical characteristics to accommodate different optional components of the particular snowmobile **10**. For simplicity, components which are different in each embodiment will be referred to by their reference numeral and corresponding letter when referring to a specific one of the components (e.g. tunnel **18**A) but will only be referred to by their reference numeral when the description could apply to any one of the embodiments (i.e. tunnel **18** will be used when referring to any one of tunnels **18**A, **18**B, and **18**C).

As seen in FIG. **1**, the snowmobile **10**, the description of which can correspond to any member of the family of snowmobiles, includes a forward end **12** and a rearward end **14** which are defined consistently with a travel direction of the snowmobile **10**. The snowmobile **10** includes a frame **16** (**16**A, **16**B, or **16**C) which includes a tunnel **18** (**18**A, **18**B, or **18**C) and an engine compartment **20** as described in greater detail below. A front suspension **22** is connected to the frame. The tunnel **18** generally consists of one or more pieces of sheet metal bent to form an inverted U-shape. The tunnel **18** extends rearwardly along the longitudinal centerline **61** of the snowmobile **10** and is connected at the front to the engine compartment **20**. An engine **24**, which is schematically illustrated in FIG. **1**, is carried by the engine compartment **20** of the frame **16**. A steering assembly (not indicated) is provided, in which two skis **26** are positioned at the forward end **12** of the snowmobile **10** and are attached to the front suspension **22** through a pair of front suspension assemblies **28**. As best seen in FIGS. **2** and **6**, each front suspension assembly **28** includes a ski leg **30**, a pair of A-arms **32** and a shock absorber **29** for operatively connecting the respective skis **26** to a steering column **34**. Other types of front suspension assemblies **28** are contemplated, such as a swing-arm or a telescopic suspension. A steering device such as a handlebar **36**, positioned forward of a rider, is attached to the upper end of the steering column **34** to allow the rider to rotate the ski legs **30** and thus the skis **26**, in order to steer the snowmobile **10**.

An endless drive track **65** is positioned at the rear end **14** of the snowmobile **10**. The endless drive track **65** is disposed generally under the tunnel **18**, and is operatively connected to the engine **24** as will be described in greater detail below. The endless drive track **65** is driven to run about a rear suspension assembly **42** for propelling the snowmobile **10**. The rear suspension assembly **42** includes a pair of slide rails **44** in sliding contact with the endless drive track **65**. The rear suspension assembly **42** also includes one or more shock absorbers **46** which may further include a coil spring (not shown) surrounding the individual shock absorbers **46**. Suspension arms **48** and **50** are provided to attach the slide rails **44** to the frame **16**. One or more idler wheels **52** are also provided in the rear suspension assembly **42**.

At the front end **12** of the snowmobile **10**, fairings **54** enclose the engine **24**, thereby providing an external shell that not only protects the engine **24**, but can also be decorated to make the snowmobile **10** more aesthetically pleasing. Typically, the fairings **54** include a hood (not indicated) and one or more side panels which can be opened to allow access to the engine **24** when this is required, for example, for inspection or maintenance of the engine **24**. In the particular snowmobile **10** shown in FIG. **1**, the side panels can be opened along a vertical axis to swing away from the snowmobile **10**. A windshield **56** may be connected to the fairings **54** near the front end **12** of the snowmobile **10** or directly to the handlebar **36**.

The windshield **56** acts as a wind screen to lessen the force of the air on the rider while the snowmobile **10** is moving.

A straddle-type seat **58** is positioned atop the frame **16**. A rear portion of the seat **58** may include a storage compartment or can be used to accommodate a passenger seat (not indicated). Two footrests **60** are positioned on opposite sides of the snowmobile **10** below the seat **58** to accommodate the driver's feet.

Turning now to FIGS. **2** to **6**, a power pack **102** for powering the endless drive track **65** will be described. For reasons described below, the power pack **102** has a power pack configuration which permits it to be disposed in any one of frames **16**A, **16**B and **16**C without having to be modified. The power pack **102** includes, but is not limited to, the engine **24**, a variable ratio belt transmission system, also known as a continuously variable transmission or CVT **40**, a reduction gearing **78**, and a countershaft **100**.

The engine **24** is a two cylinder, two-cycle internal combustion engine. It is contemplated that the engine **24** could be of any other type, such as a four-cycle internal combustion engine. The engine **24** is disposed in the engine compartment **20** and rests on vibration dampers **104** (FIG. **3**) to reduce the transmission of vibrations from the engine **24** to the frame **16**. As best seen in FIGS. **4** and **5**, the engine **24** has a plurality of air intakes **106** (one per cylinder) on a rear side thereof. An air intake manifold **108** is connected to the rear side of the engine **24** so as to fluidly communicate with the air intakes **106**. Two air intake controllers **110**, disposed vertically higher and rearwardly from the air intake manifold **108**, fluidly communicate with the air intake manifold **108** via air intake passages **112**. Although two air intake controllers **110** are illustrated, it is contemplated that only one air intake controller **110** could be used. The air intake controllers **110** each comprise a valve (not shown) which controls the flow of air to the engine **24**. It is contemplated that the air control devices could be in the form of a carburetor or a throttle body. A plurality of exhaust ports **114** (one per cylinder) are disposed on a front side of the engine **24**. An exhaust system (not shown) fluidly communicates with the engine **24** to exhaust the gases from the combustion process. The engine **24** comprises a crankshaft (not shown) which drives an output shaft **25**. The crankshaft and output shaft **25** are coaxial and rotate about a horizontally disposed axis that extends generally transversely to the longitudinal centerline **61** of the snowmobile **10**. It is contemplated that the crankshaft and output shaft **25** could be offset from one another. It is also contemplated that the crankshaft and the output shaft **25** could be integrally formed as a single shaft. As would be known by those skilled in the art, the engine **24** includes other systems, such as the fuel and electrical systems, but these have not been illustrated or described herein for simplicity.

Turning now to FIGS. **2** to **6** and **13**, the power pack configuration of the power pack **102** will be described. As can be seen in FIGS. **2** and **6**, the CVT **40** is disposed on a first side of the engine **24** and includes a driving pulley **80** coupled to rotate with the output shaft **25** of the engine **24** and a driven pulley **88** coupled to one end of a transversely mounted countershaft **100**. The countershaft **100** is supported in the engine compartment **20** through bearings. As can be seen, the countershaft **100** traverses the width of the engine compartment **20**. As best seen in FIG. **5**, the countershaft is disposed rearwardly of the engine **24**, vertically higher than the air intake openings **106**, and forwardly of the air intake controllers **110**. The countershaft **100** is also disposed vertically higher than the tunnel **18** and a central axis of the countershaft **100** (the countershaft axis) is generally vertically aligned with a top portion of the engine **24**. In this position of the countershaft **100**, the driven pulley **88** is in proximity to the driving pulley **80** which ensures a good torque transfer from the driving pulley **80** to the driven pulley **88**. Also, by locating the countershaft **100** in this position and by appropriately sizing the driven pulley **88**, the lowermost portion of the driven pulley **88** is disposed vertically higher than the tunnel **18** such that regardless of in which frame **16**A, **16**B, or **16**C the power pack **102** is disposed, the driven pulley **88** will not interfere with the corresponding tunnel **18**A, **18**B, or **18**C. Therefore, the power pack **102** can be used in any one of frames **16**A, **16**B, and **16**C without having to modify the power pack configuration and without having to move the engine laterally with respect to the longitudinal centerline **61**, thus maintaining the transverse mass centralization of the snowmobile **10**. As can be seen in FIGS. **6** and **13**, a distance X between the centerline **61** and an end of the engine **24** in frames **16**A and **16**B remains the same, and would be the same in frame **16**C. Also since the power pack **102** can remain the same regardless of which frame **16**A, **16**B, or **16**C is used, the frames **16**A, **16**B, and **16**C can have engine compartments **20** that have the same configuration.

The driving pulley **80** of the CVT **40** is coupled to rotate with the output shaft **25** of the engine **24** and includes a pair of opposed frustoconical belt drive sheaves (one fixed sheave and one moving sheave) between which the drive belt (not shown) is located. The sheaves are biased apart, and the driving pulley **80** incorporates a centrifugally operated mechanism that acts to urge the moving sheave towards the fixed sheave with a force that increases with increasing output shaft speed so that as the engine speed increases, the reduction ratio of the CVT **40** decreases. The driven pulley **88** is coupled to rotate with the countershaft **100** and includes a pair of frustoconical belt drive sheaves between which the drive belt is located. The driven pulley **88** reacts to the torque from the endless drive track **65** by separation of its sheaves which allows the drive belt to engage the driven pulley **88** at a diameter that is progressively reduced as the torque increases or that is progressively increased as the torque decreases. When the driving pulley **80** increases its diameter, the driven pulley **88** decreases its effective diameter and vice versa, thus keeping the drive belt in tension.

A reduction gearing **78** is disposed on a second side of the engine **24** which is opposite the side on which the CVT **40** is disposed. The end of the countershaft **100** which is opposite the end on which the driven pulley **88** is disposed is connected to an input member of the reduction gearing **78**. The input member of the reduction gearing **78** consists of a small sprocket connected to the countershaft **100**. An output member of the reduction gearing **78** is connected to a front drive axle **90**. The output member consists of sprocket which is larger than the sprocket of the input member and is connected to the drive axle **90**. The output member is driven via a chain by the input member. It is also contemplated that the output member could be driven via gears by the input member. The input member, the output member, and the chain are enclosed within the housing of the reduction gearing **78**. The front drive axle **90** is disposed in the tunnel **18** and carries sprocket wheels (not shown)) that form a driving connection with the endless drive track **65**. The output shaft **25**, the countershaft **100**, and the front drive axle **90** are arranged such that the countershaft **100** is disposed rearwardly of the output shaft **25** and forwardly of the front drive axle **90**.

In this particular example, the driving pulley **80** rotates at the same speed as the output shaft **25** of the engine **24**. The speed of rotation of the countershaft **100** is determined in accordance with the instantaneous ratio of the CVT **40**. The

drive axle **90** rotates at a lower speed than the countershaft **100** since the reduction gearing **78** has a reduction ratio.

As previously mentioned, since the power pack **102** has a power pack configuration in which the driven pulley **88** of the CVT **40** does not interfere with the tunnel **18**, different members of the family of snowmobiles **10** can be designed with different tunnel widths without having to move the power pack **102** transversely as was the case in the prior art. Since the power pack **102** does not have to be moved from one member of the family to the other, then the same configuration of engine compartment can be used by all members of the family. This advantageously reduces the manufacturing cost as would be understood by those skilled in the art. The configuration of engine compartment **20** will now be described with respect to FIGS. **2** to **6** and more particularly FIGS. **10** to **12**, but the same engine compartment **20** also appears in the other figures. It should be noted that portions of the engine compartment have been removed from FIGS. **2** to **6** such that portions of the power pack **102** can be seen more clearly. It should be understood that the configuration of the engine compartment **20** described herein is only one possible configuration and that other configurations for engine compartment **20** are contemplated, but that regardless of the configuration selected, since the power pack **102** does not have to be moved transversely as the tunnel **18** is widened, a particular configuration could be used by all members of the family of snowmobile.

The lower portion of the engine compartment **20** has a front sub-frame **116** behind which are connected a right side wall **118**, a left side wall **120**, and an engine compartment bottom **122**. The side walls **118**, **120** are generally vertical and generally parallel to the longitudinal centerline **61**. The engine compartment bottom **122** is generally horizontal and extends transversely between and beyond the side walls **118**, **120**. The length by which the engine compartment bottom **122** extends beyond the side walls **118**, **120** is determined by features of the snowmobile **10** that need to be attached to engine compartment **20**. Although the engine compartment bottom **122** is shown as being different from one frame **16** to the other, it could actually be the same in all of the frames **16**, therefore this change is considered to be one of the minor variations contemplated and as such the engine compartments **20** are still considered to have the same configuration (see the definition of "same" above). The front sub-frame **116** has a pair of inverted generally V-shaped suspension mounting brackets **124**, one on each side thereof, to receive the pair of front suspension assemblies **28** as seen in FIGS. **2** and **6**. It is contemplated that the suspension mounting brackets **124** could be modified to accommodate a different type of front suspension assemblies **28** from one member of the family of snowmobiles to the other. A bulkhead **126** has one side connected to a rear portion of right side wall **118**, the other side connected to a rear portion of the left side wall **120**, and a bottom connected to a rear portion of the engine compartment bottom **122**. A countershaft support bracket **128** is connected to a left side of the bulkhead **126**. The countershaft support bracket **128** has an opening **130** to receive and support a left end portion of the countershaft **100**. The front sub-frame **116**, the right and left side walls **118**, **120**, the engine compartment bottom **122**, the bulkhead **126**, and the countershaft support bracket **128** are preferably made from bent sheet metal or by casting, and are preferably connected to each other by fasteners such as rivets or bolts. As seen in FIGS. **2** to **6**, the engine **24** is disposed longitudinally between the front sub-frame **116** and the bulkhead **126**, and transversely between the right and left side walls **118**, **120** such that the mass of the power pack **102** is transversely balanced.

The upper portion of the engine compartment **20** has a front cross-member **132** which extends transversely from one suspension mounting bracket **124** to the other. A pair of front braces **134** extend upwardly and rearwardly from the pair of suspension mounting brackets **124** to a steering bracket **136**. The steering bracket **136** is aligned with the longitudinal centerline **61** of the snowmobile **10** and has an opening therein to receive the steering column **34**. A rear cross-member **138** extends transversely from the upper end of the countershaft support bracket **128** to the reduction gearing **78**. A pair of columns **140** extend from the ends of the rear cross-member **138** to the steering bracket **136**. A pair of rear braces **142** extend rearwardly from the steering bracket to a top of the tunnel **18**. The front braces **134**, the columns **140**, and rear braces **142** form together a pyramidal-like structure which enhances the torsional and structural rigidity of the frame **16**. The front cross-member **132**, the front braces **134**, the rear cross-member **138**, the columns **140**, and the rear braces **142** are preferably made of aluminum tubing, but other structures and materials are also contemplated.

A first member of the family of snowmobiles has the features of the snowmobile **10** described above, a power pack configuration corresponding to the configuration of power pack **102** described above, and a frame **16**A. The frame **16**A has an engine compartment configuration corresponding to the engine compartment **20** described above and a tunnel **18**A disposed rearward of the engine compartment **20**. The frame **16**A will now be described with respect to FIGS. **2** to **9**.

As best seen in FIG. **7**, the tunnel **18**A of frame **16**A is made of three parts. The tunnel **18**A has a central tunnel portion **144**A, a right side tunnel portion **146**A, and a left side tunnel portion **148**A. The central tunnel portion **144**A is disposed generally horizontally and has an integrated heat exchanger **150**A which is used to cool the engine coolant. It is contemplated that the heat exchanger **150**A could be fastened to a bottom of the central tunnel portion **144**A or could be disposed elsewhere on the frame **16**A. The front portion of the central tunnel portion **144** is connected to a rear portion of the bulkhead **126** via fasteners. It is contemplated that the front portion of the central tunnel portion **144** could alternatively be connected to a rear portion of the bulkhead **126** by welding. The right and left side tunnel portions **146**A, **148**A are disposed generally vertically and each have a footrest **60** extending outwardly from a bottom portion thereof. The right side tunnel portion **146**A has a right side horizontal flange **152**A which connects the right side tunnel portion **146**A to a right side of the central tunnel portion **144**A. Similarly, the left side tunnel portion **148**A has a left side horizontal flange **154**A that connects the left side tunnel portion **148**A to a left side of the central tunnel portion **144**A. The right and left side horizontal flanges **152**A, **154**A are fastened to the central frame portion **144**A at a certain distance from the longitudinal centerline **61** of the snowmobile **10** such that the tunnel **18**A has a tunnel width W1 (FIG. **6**) which can accommodate the width of the endless track **65** for which the frame **16**A is designed. The tunnel width is measured directly below the central tunnel portion **144** perpendicularly to the longitudinal centerline **61** from the inside of the right tunnel side portion **146** to the inside of the left tunnel side portion **148**. In the event that the tunnel **18** has a non uniform width along its length, the tunnel width is to be measured directly above the front drive axle **90**. For exemplary purposes only and to provide a reference with respect to the other tunnels **18**B and **18**C, the tunnel **18**A could accommodate an endless track **65** having a width of 50.8 cm (20 inches). Since the tunnel **18**A has a width W1 which is greater than the width of the engine compartment **20**, right and left spacers **156**A and **158**A,

respectively, are provided in order to connect the tunnel **18**A to the sides of the engine compartment **20**. The right spacer **156**A is inserted between the right tunnel side portion **146**A and a right side of the engine compartment **20** and is fastened to each of them. Similarly, the left spacer **158**A is inserted between the left tunnel side portion **148**A and a left side of the engine compartment **20** and is fastened to each of them.

Turning now to FIG. **8**, the right spacer **156**A will now be described. The right spacer **156**A has a central spacer portion **160**, an inner flange **162**, and an outer flange **164**. The width of the central spacer portion **160** is selected such that the width of the right spacer **156**A corresponds to the distance between the right tunnel side portion **146**A and the right side of the engine compartment **20**. The inner flange **162** provides fastener openings **166** to receive the fasteners which fasten the right spacer **156**A to the right side of the engine compartment **20**. The outer flange **164** provides fastener openings **168** to receive the fasteners which fasten the right spacer **156**A to the right side tunnel portion **146**A. The profiles of the central spacer portion **160**, the inner flange **162**, and the outer flange **164** are selected to correspond to the profiles of the portions of the engine compartment **20** and right side tunnel portion **146**A to which the right spacer **156**A is fastened. An upper flange **170** is provided at a top of the central spacer portion **160** to provide fastener openings **172** to receive the fasteners which fasten the right spacer **156**A to the right side horizontal flange **152**A. An L-shaped bracket **174** is provided at a bottom of the central spacer portion **160** to provide additional fastener openings **176** to receive additional fasteners which fasten the right spacer **156**A to the right side of the engine compartment **20** and to provide fastener openings **178** to receive fasteners which fasten the right spacer **156**A to the portion of the engine compartment bottom **122** which extends beyond the right side wall **118** of the engine compartment **20**. This embodiment of the right spacer **156**A is preferred as it solidly connects the right side tunnel portion **146**A and the right side of the engine compartment **20** and completely fills the space therebetween. However, other constructions of the right spacer **156**A are contemplated. For example, the right spacer **156**A could consist of one or more brackets which link the right side tunnel portion **146**A and the right side of the engine compartment **20**.

FIG. **9** illustrates the left spacer **158**A. The left spacer **158**A is substantially a mirror image of the right spacer **156**A. Therefore, like elements have been labeled with the same reference numerals and the left spacer **158**A will not be described in detail. It should be understood that the description of the right spacer **156**A when applied to the left spacer **158**A would refer to the elements disposed on the left side of the frame **16**A (i.e. the left side tunnel portion **148**A, the left side of the engine compartment **20**, etc.).

A second member of the family of snowmobiles has the features of the snowmobile **10** described above, a power pack configuration corresponding to the configuration of power pack **102** described above, and a frame **16**B. The frame **16**B has an engine compartment configuration corresponding to the engine compartment **20** described above and a tunnel **18**B disposed rearward of the engine compartment **20**. The frame **16**B will now be described with respect to FIGS. **10** to **12**.

The tunnel **18**B of frame **16**B is also made of three parts. The tunnel **18**B has a central tunnel portion **144**B, a right side tunnel portion **146**B, and a left side tunnel portion **148**B which have the same physical characteristics as the central tunnel portion **144**A, the right side tunnel portion **146**A, and the left side tunnel portion **148**A, and will therefore not be described again. The main difference between the tunnel **18**B and the tunnel **18**A, is that the right and left side horizontal flanges **152**B, **154**B of the right and left side tunnel portions **146**B and **148**B are fastened to the central frame portion **144**B at a shorter distance from the longitudinal centerline **61** of the snowmobile **10** than in tunnel **18**A. Therefore, the tunnel **18**B has a tunnel width W**2** (FIG. **10**) which can accommodate the width of the endless track **65** for which the frame **16**B is designed, which is less than the width of the endless track **65** for which the frame **16**A is designed. For exemplary purposes only and to provide a reference with respect to the other tunnels **18**A and **18**C, the tunnel **18**B could accommodate an endless track **65** having a width of 38.1 cm (15 inches). Since the tunnel **18**B has a width W**2** which substantially the same as the width of the engine compartment **20**, the right and left side tunnel portions **146**B and **148**B are directly fastened to their corresponding sides of the engine compartment **20**. Thus, no spacers are required in the construction of frame **16**B.

A third member of the family of snowmobiles has the features of the snowmobile **10** described above, a power pack configuration corresponding to the configuration of power pack **102** described above, and a frame **16**C. The frame **16**C has an engine compartment configuration corresponding to the engine compartment **20** described above and a tunnel **18**C disposed rearward of the engine compartment **20**. The frame **16**C will now be described with respect to FIGS. **13** to **19**.

The tunnel **18**C of frame **16**C is also made of three parts. The tunnel **18**C has a central tunnel portion **144**C, a right side tunnel portion **146**C, and a left side tunnel portion **148**C which have the same physical characteristics as the central tunnel portion **144**A, the right side tunnel portion **146**A, and the left side tunnel portion **148**A, and will therefore not be described again. The main difference between the tunnel **18**C and the tunnel **18**A, is that the right and left side horizontal flanges **152**C, **154**C of the right and left side tunnel portions **146**C and **148**C are fastened to the central frame portion **144**C at a greater distance from the longitudinal centerline **61** of the snowmobile **10** than in tunnel **18**A. Therefore, the tunnel **18**C has a tunnel width W**3** (FIG. **14**) which can accommodate the width of the endless track **65** for which the frame **16**C is designed, which is greater than the width of the endless track **65** for which the frame **16**A is designed. For exemplary purposes only and to provide a reference with respect to the other tunnels **18**A and **18**B, the tunnel **18**C could accommodate an endless track **65** having a width of 61 cm (24 inches). Since the tunnel **18**C has a width W**3** which is greater than the width of the engine compartment **20**, right and left spacers **156**C and **158**C, respectively, are provided in order to connect the tunnel **18**C to the sides of the engine compartment **20**. The right spacer **156**C is inserted between the right tunnel side portion **146**C and a right side of the engine compartment **20** and is fastened to each of them. Similarly, the left spacer **158**C is inserted between the left tunnel side portion **148**C and a left side of the engine compartment **20** and is fastened to each of them.

FIGS. **18** and **19** illustrate the right and left spacers **156**C and **158**C respectively. The spacers **156**C and **158**C have substantially the same physical characteristics as the spacers **156**A and **158**A respectively. The main difference is that the spacers **156**C and **158**C are wider than the spacers **156**A and **158**A since the distance between the right and left tunnel side portions **146**C and **148**C and the engine compartment **20** in frame **16**C is greater than a corresponding distance in frame **16**A. Therefore, like elements have been labeled with the same reference numerals and the spacers **156**C and **158**C will not be described in detail.

Although not described, it should be understood that other members of the family of snowmobiles are contemplated

which could be designed with other tunnel widths by applying the teachings of the present application.

As should be apparent from the above description, the tunnels **18**A, **18**B, and **18**C can be manufactured by using three common parts (central portion **144**, right side tunnel portion **146**, and left side tunnel portion **148**). The different tunnel widths are obtained by connecting the tunnel side portions **146**, **148** to the central tunnel portion **144** closer or farther away from the longitudinal centerline **61** to obtain the desired width. Appropriately sized spacers **156**, **158** are then inserted, as necessary, between the tunnel **18** and the sides of the engine compartment **20** to complete the assembly of the frame **16**. As would be understood by those skilled in the art, having common parts is advantageous as it reduces manufacturing cost. It is contemplated that the tunnel **18** of each frame **16** could also be made of two or more than three parts. It is also contemplated that each tunnel **18**A, **18**B, and **18**C could each be made of a single part each having a different tunnel width.

Modifications and improvements to the above-described embodiments of the present invention may become apparent to those skilled in the art. The foregoing description is intended to be exemplary rather than limiting. The scope of the present invention is therefore intended to be limited solely by the scope of the appended claims.

What is claimed is:

1. A system for assembling a family of snowmobiles comprising:

first components for assembling a first snowmobile, the first components including:

a first frame, the first frame including:

a first engine compartment, the first engine compartment having an engine compartment configuration; and

a first tunnel rearward of the first engine compartment, the first tunnel having a first tunnel width;

a first engine;

a first countershaft;

a first continuously variable transmission (CVT);

a first reduction gearing;

a first endless drive track; and

a first pair of skis; and

second components for assembling a second snowmobile, the second components including:

a second frame, the second frame including:

a second engine compartment, the second engine compartment having the engine compartment configuration; and

a second tunnel rearward of the second engine compartment, the second tunnel having a second tunnel width being greater than the first tunnel width;

a second engine;

a second countershaft;

a second CVT;

a second reduction gearing;

a second endless drive track; and

a second pair of skis;

wherein when the first snowmobile is assembled using the first components:

the first engine is disposed in the first engine compartment;

the first countershaft traverses the first engine compartment, and a distance from a longitudinal centerline of the snowmobile to an end of the first countershaft being more than half the first tunnel width, the end of the first countershaft being on a first side of the first engine;

the first CVT operatively connects the first engine with the first countershaft, and the first CVT is disposed on the first side of the first engine;

the first reduction gearing is operatively connected to the first countershaft on a second side of the first engine opposite the first side;

the first endless drive track is disposed below the first tunnel for propelling the first snowmobile, and the first endless drive track is operatively connected to the first reduction gearing; and

the first pair of skis is operatively connected to the first frame; and

wherein when the second snowmobile is assembled using the second components:

the second engine is disposed in the second engine compartment;

the second countershaft traverses the second engine compartment, and a distance from the longitudinal centerline of the snowmobile to an end of the second countershaft being less than half the second tunnel width, the end of the second countershaft being on a first side of the second engine;

the second CVT operatively connects the second engine and the second countershaft, and the second CVT is disposed on the first side of the second engine;

the second reduction gearing is operatively connected to the second countershaft on a second side of the second engine opposite the first side;

the second endless drive track is disposed below the second tunnel for propelling the second snowmobile, and the second endless drive track is operatively connected to the second reduction gearing; and

the second pair of skis is operatively connected to the second frame.

2. The system of claim **1**, wherein the first engine has engine physical characteristics and the second engine has the engine physical characteristics;

wherein the first countershaft has countershaft physical characteristics and the second countershaft has the countershaft physical characteristics;

wherein the first CVT has CVT physical characteristics and the second CVT has the CVT physical characteristics; and

wherein the first reduction gearing has reduction gearing physical characteristics and the second reduction gearing has the reduction gearing physical characteristics.

3. The system of claim **2**, wherein the first engine, the first countershaft, the first CVT, and the first reduction gearing are disposed in a power pack configuration relative to the first engine compartment when the first snowmobile is assembled using the first components; and

wherein the second engine, the second countershaft, the second CVT, and the second reduction gearing are disposed in the power pack configuration relative to the second engine compartment when the second snowmobile is assembled using the second components.

4. The system of claim **1**, wherein the first endless drive track has a first track width; and

wherein the second endless drive track has a second track width being greater than the first track width.

5. The system of claim **1**, wherein the second components further include:

a first spacer; and

a second spacer;

wherein when the second snowmobile is assembled using the second components:

the first spacer is disposed between the second tunnel and a first side of the second engine compartment, and the first spacer connects the second tunnel to the first side of the second engine compartment; and

the second spacer is disposed between the second tunnel and a second side of the second engine compartment, and the second spacer connects the second tunnel to the second side of the second engine compartment.

6. The system of claim **5**, wherein the second tunnel includes:

a central tunnel portion having a first side and a second side;

a first tunnel side portion fastened to the first side of the central tunnel portion; and

a second tunnel side portion fastened to the second side of the central tunnel portion.

7. The system of claim **6**, wherein the central tunnel portion comprises a heat exchanger.

8. The system of claim **6**, wherein when the second snowmobile is assembled using the second components:

the first spacer is disposed between the first tunnel side portion and the first side of the second engine compartment; and

the second spacer is disposed between the second tunnel side portion and the second side of the second engine compartment.

9. The system of claim **1**, wherein the first CVT has a driven pulley, and when the first snowmobile is assembled using the first components the driven pulley of the first CVT is disposed vertically higher than the first tunnel; and

wherein the second CVT has a driven pulley, and when the second snowmobile is assembled using the second components the driven pulley of the second CVT is disposed vertically higher than the second tunnel.

10. A snowmobile comprising:

an engine compartment having an engine compartment configuration;

one of a first tunnel and a second tunnel, the one of the first tunnel and the second tunnel being connected to the engine compartment and disposed rearward of the engine compartment, the first tunnel having a first tunnel width, the second tunnel having a second tunnel width, the second tunnel width being greater than the first tunnel width, the engine compartment being configured to connect to either one of the first tunnel and the second tunnel;

an engine disposed in the engine compartment, a position of the engine in the engine compartment being the same regardless of which one of the first tunnel and the second tunnel is connected to the engine compartment;

a countershaft traversing the engine compartment, a distance from a longitudinal centerline of the snowmobile to an end of the countershaft being more than half the first tunnel width and less than half the second tunnel width;

an endless drive track disposed below the one of the first tunnel and the second tunnel for propelling the snowmobile, the first endless drive track being operatively connected to the engine; and

a pair of skis operatively connected to the engine compartment.

11. The snowmobile of claim **10**, further comprising:

a continuously variable transmission (CVT) operatively connecting the engine with the countershaft, the CVT being disposed on a first side of the engine.

12. The snowmobile of claim **11**, further comprising a reduction gearing operatively connected to the countershaft on a second side of the engine opposite the first side;

wherein the endless drive track is operatively connected to the first reduction gearing.

13. The snowmobile of claim **10**, wherein the one of the first tunnel and the second tunnel is the second tunnel;

wherein the snowmobile further comprises:

a first spacer disposed between the second tunnel and a first side of the engine compartment, the first spacer connecting the second tunnel to the first side of the engine compartment; and

a second spacer disposed between the second tunnel and a second side of the engine compartment, the second spacer connecting the second tunnel to the second side of the engine compartment.

14. A system for assembling a family of snowmobiles comprising:

first components for assembling a first snowmobile, the first components including:

a first frame, the first frame including:

a first engine compartment, the first engine compartment having an engine compartment configuration; and

a first tunnel rearward of the first engine compartment, the first tunnel having a first tunnel width;

a first engine;

a first countershaft;

a first continuously variable transmission (CVT);

a first reduction gearing;

a first endless drive track; and

a first pair of skis; and

second components for assembling a second snowmobile, the second components including:

a second frame, the second frame including:

a second engine compartment, the second engine compartment having the engine compartment configuration; and

a second tunnel rearward of the second engine compartment, the second tunnel having a second tunnel width being greater than the first tunnel width;

a second engine;

a second countershaft;

a second CVT;

a second reduction gearing;

a second endless drive track;

a second pair of skis;

a first spacer; and

a second spacer;

wherein when the first snowmobile is assembled using the first components:

the first engine is disposed in the first engine compartment;

the first countershaft traverses the first engine compartment;

the first CVT operatively connects the first engine with the first countershaft, and the first CVT is disposed on a first side of the first engine;

the first reduction gearing is operatively connected to the first countershaft on a second side of the first engine opposite the first side;

the first endless drive track is disposed below the first tunnel for propelling the first snowmobile, and the first endless drive track is operatively connected to the first reduction gearing; and

the first pair of skis is operatively connected to the first frame; and

wherein when the second snowmobile is assembled using the second components:

the second engine is disposed in the second engine compartment;

the second countershaft traverses the second engine compartment;

the second CVT operatively connects the second engine and the second countershaft, and the second CVT is disposed on a first side of the second engine;

the second reduction gearing is operatively connected to the second countershaft on a second side of the second engine opposite the first side;

the second endless drive track is disposed below the second tunnel for propelling the second snowmobile, and the second endless drive track is operatively connected to the second reduction gearing;

the second pair of skis is operatively connected to the second frame;

the first spacer is disposed between the second tunnel and a first side of the second engine compartment, and the first spacer connects the second tunnel to the first side of the second engine compartment; and

the second spacer is disposed between the second tunnel and a second side of the second engine compartment, and the second spacer connects the second tunnel to the second side of the second engine compartment.

15. The system of claim **14**, wherein the first engine has engine physical characteristics and the second engine has the engine physical characteristics;

wherein the first countershaft has countershaft physical characteristics and the second countershaft has the countershaft physical characteristics;

wherein the first CVT has CVT physical characteristics and the second CVT has the CVT physical characteristics; and

wherein the first reduction gearing has reduction gearing physical characteristics and the second reduction gearing has the reduction gearing physical characteristics.

16. The system of claim **15**, wherein the first engine, the first countershaft, the first CVT, and the first reduction gearing are disposed in a power pack configuration relative to the first engine compartment when the first snowmobile is assembled using the first components; and

wherein the second engine, the second countershaft, the second CVT, and the second reduction gearing are disposed in the power pack configuration relative to the second engine compartment when the second snowmobile is assembled using the second components.

17. The system of claim **14**, wherein the second tunnel includes:

a central tunnel portion having a first side and a second side;

a first tunnel side portion fastened to the first side of the central tunnel portion; and

a second tunnel side portion fastened to the second side of the central tunnel portion.

18. The system of claim **17**, wherein the central tunnel portion comprises a heat exchanger.

19. The system of claim **17**, wherein when the second snowmobile is assembled using the second components:

the first spacer is disposed between the first tunnel side portion and the first side of the second engine compartment; and

the second spacer is disposed between the second tunnel side portion and the second side of the second engine compartment.

20. The system of claim **14**, wherein the first CVT has a driven pulley, and when the first snowmobile is assembled using the first components the driven pulley of the first CVT is disposed vertically higher than the first tunnel; and

wherein the second CVT has a driven pulley, and when the second snowmobile is assembled using the second components the driven pulley of the second CVT is disposed vertically higher than the second tunnel.

* * * * *