US009051027B1

(12) **United States Patent**
Vezina et al.

(10) **Patent No.: US 9,051,027 B1**
(45) **Date of Patent: Jun. 9, 2015**

(54) **VEHICLE HAVING AN INERTIA WHEEL**

(71) Applicant: **BOMBARDIER RECREATIONAL PRODUCTS INC.**, Valcourt (CA)

(72) Inventors: **Sebastien Vezina**, Sherbrooke (CA); **Jonathan Fortier**, Lawrenceville (CA)

(73) Assignee: **BOMBARDIER RECREATIONAL PRODUCTS INC.**, Valcourt (CA)

(*) Notice: Subject to any disclaimer, the term of this patent is extended or adjusted under 35 U.S.C. 154(b) by 0 days.

(21) Appl. No.: **14/093,311**

(22) Filed: **Nov. 29, 2013**

Related U.S. Application Data

(60) Provisional application No. 61/731,859, filed on Nov. 30, 2012.

(51) **Int. Cl.**
B62M 27/02 (2006.01)

(52) **U.S. Cl.**
CPC ***B62M 27/02*** (2013.01)

(58) **Field of Classification Search**
USPC 180/190
See application file for complete search history.

(56) **References Cited**

U.S. PATENT DOCUMENTS

2,960,058	A *	11/1960	Magnani	440/30
3,734,222	A *	5/1973	Bardwick, III	180/165
5,314,034	A	5/1994	Chittal	
6,360,838	B1	3/2002	Kulhavy	
6,626,258	B1	9/2003	Forbes	
7,648,148	B1	1/2010	Mercier	
2007/0176384	A1	8/2007	Brudeli	
2010/0140007	A1	6/2010	Ogura et al.	
2012/0298437	A1	11/2012	Dietz	

* cited by examiner

Primary Examiner — Kevin Hurley
Assistant Examiner — Michael Stabley
(74) *Attorney, Agent, or Firm* — BCF LLP

(57) **ABSTRACT**

A vehicle has a frame, a straddle seat, a motor, a belt transmission system, front left and right suspension assemblies, front left and right ground engaging members, a rear suspension assembly, a rear ground engaging member, a steering assembly operatively connected to the front left and right ground engaging members and having a handlebar, and an inertia wheel. The inertia wheel is operatively connected to the steering assembly. The inertia wheel pivots about a generally vertical axis when the handlebar is turned to steer the front left and right ground engaging members. The inertia wheel pivots about the vertical axis in a same direction as the front left and right ground engaging members when steered by the handlebar.

20 Claims, 19 Drawing Sheets

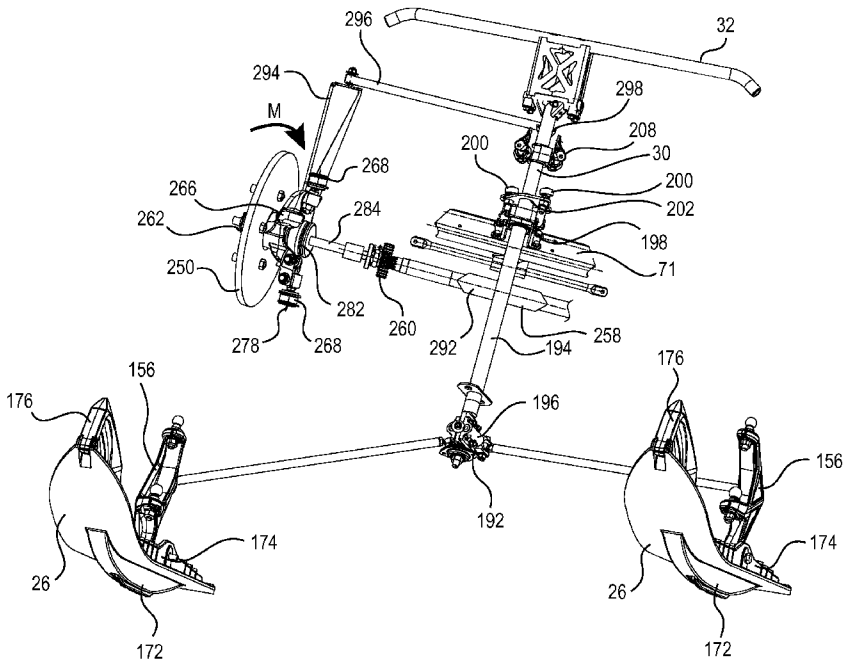

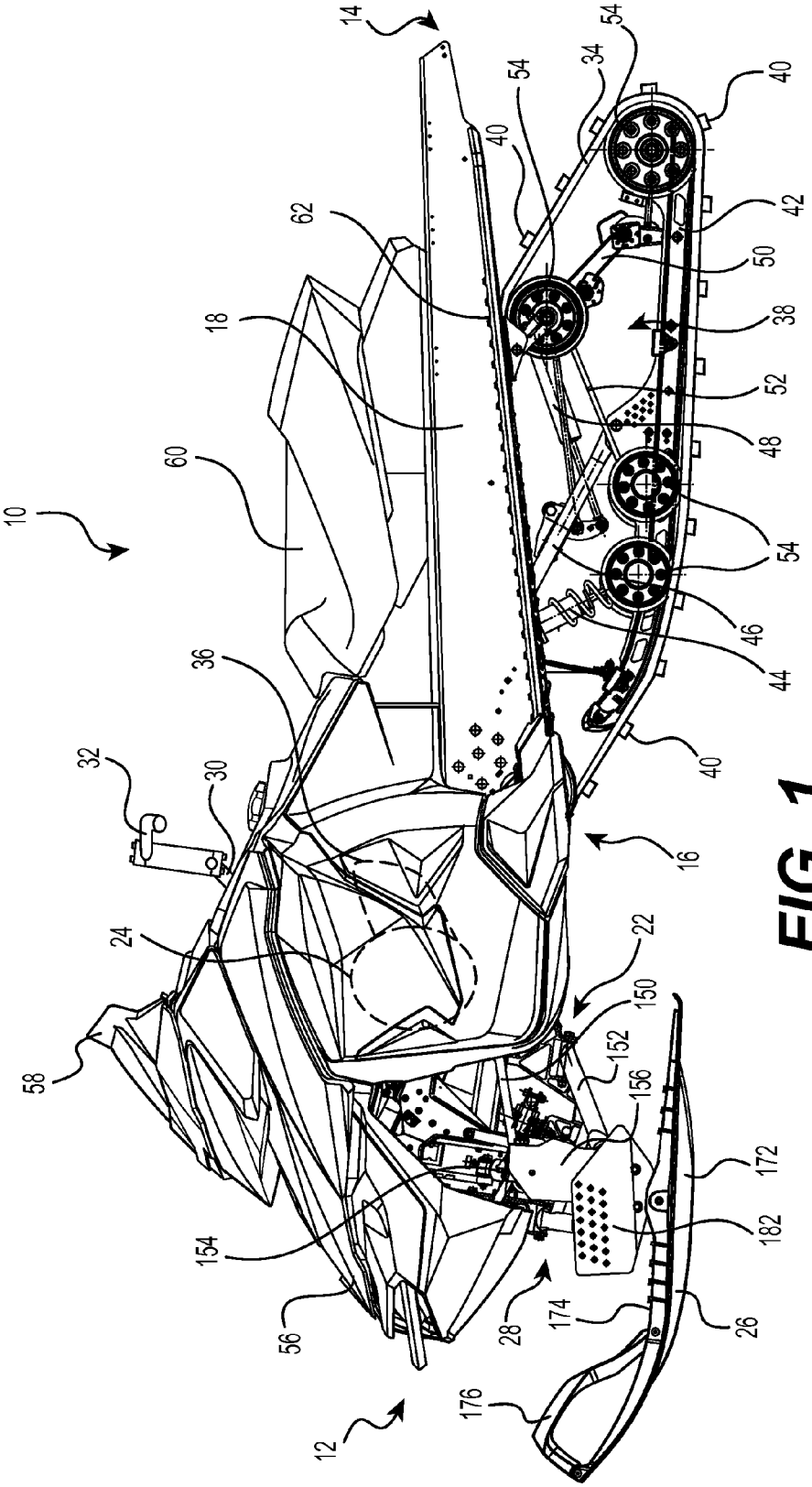
10
12
14
16
18
22
24
26
28
30
32
34
36
38
40
42
44
46
48
50
52
54
56
58
60
62
150
152
154
156
172
174
176
182

FIG. 1

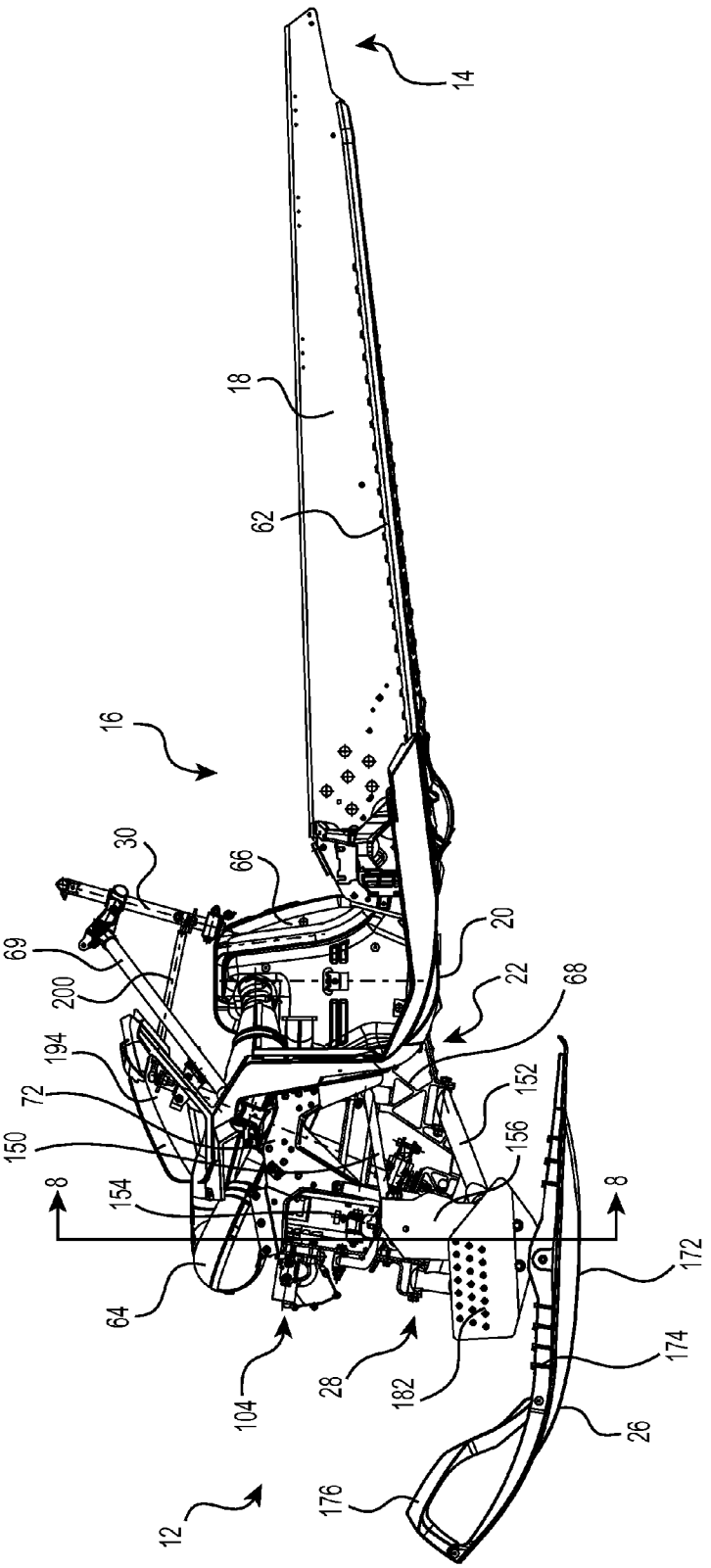
14
18
62
16
30
66
69
200
20
22
68
194
72
150
152
156
154
8
8
64
172
174
104
28
182
26
176
12

FIG. 2

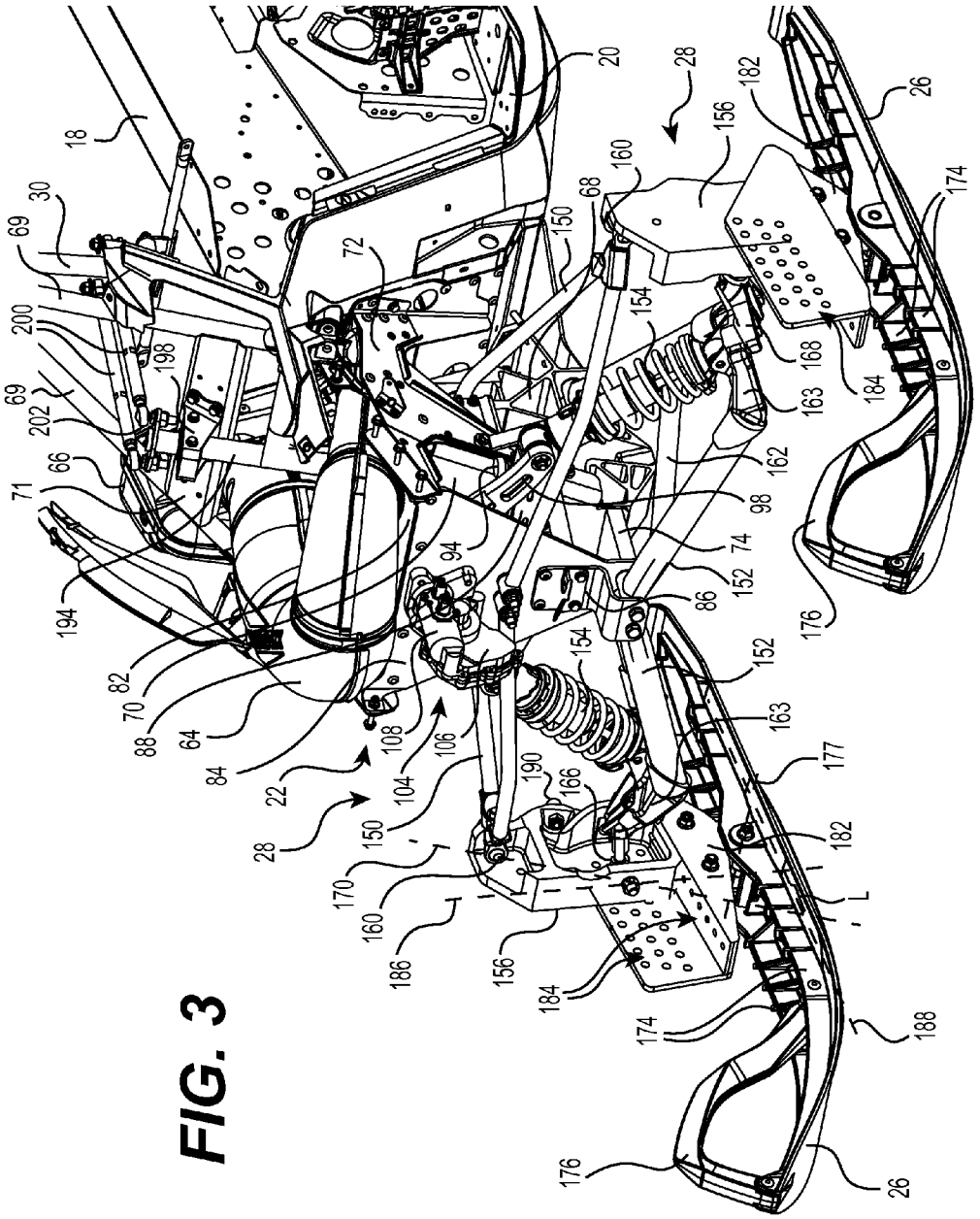
18
20
28
30
69
200
198
69
202
66
71
194
82
70
88
64
84
22
28
104
106
108
150
170
160
186
156
184
174
188
176
26
182
156
160
68
150
72
154
168
163
162
98
74
152
86
94
154
152
163
177
182
190
166
L
176
174
26

FIG. 3

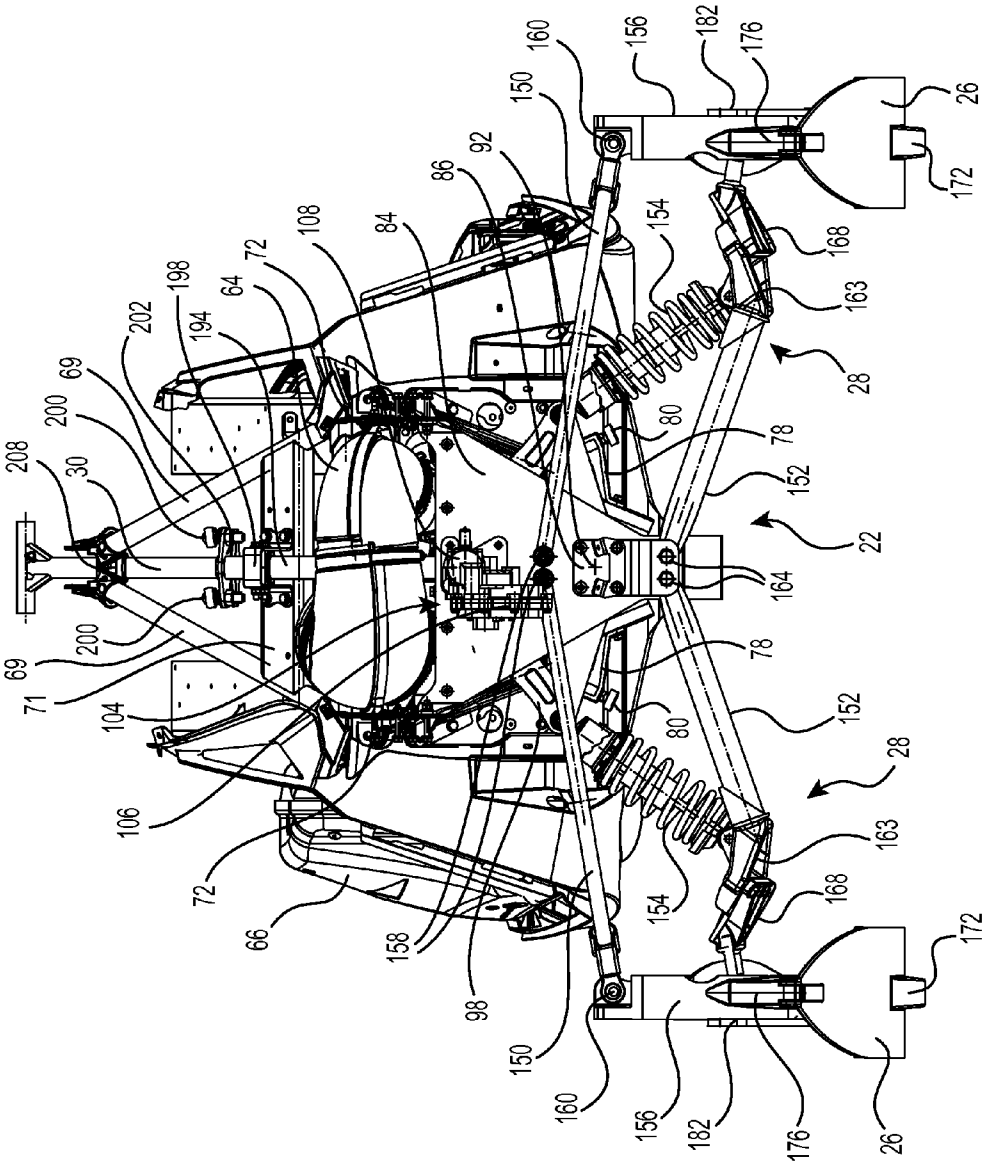
208
30
69
200
202
198
194
64
72
108
84
86
92
150
160
156
182
176
26
172
168
163
154
28
80
78
152
22
164
71
104
106
66
158
98

FIG. 4

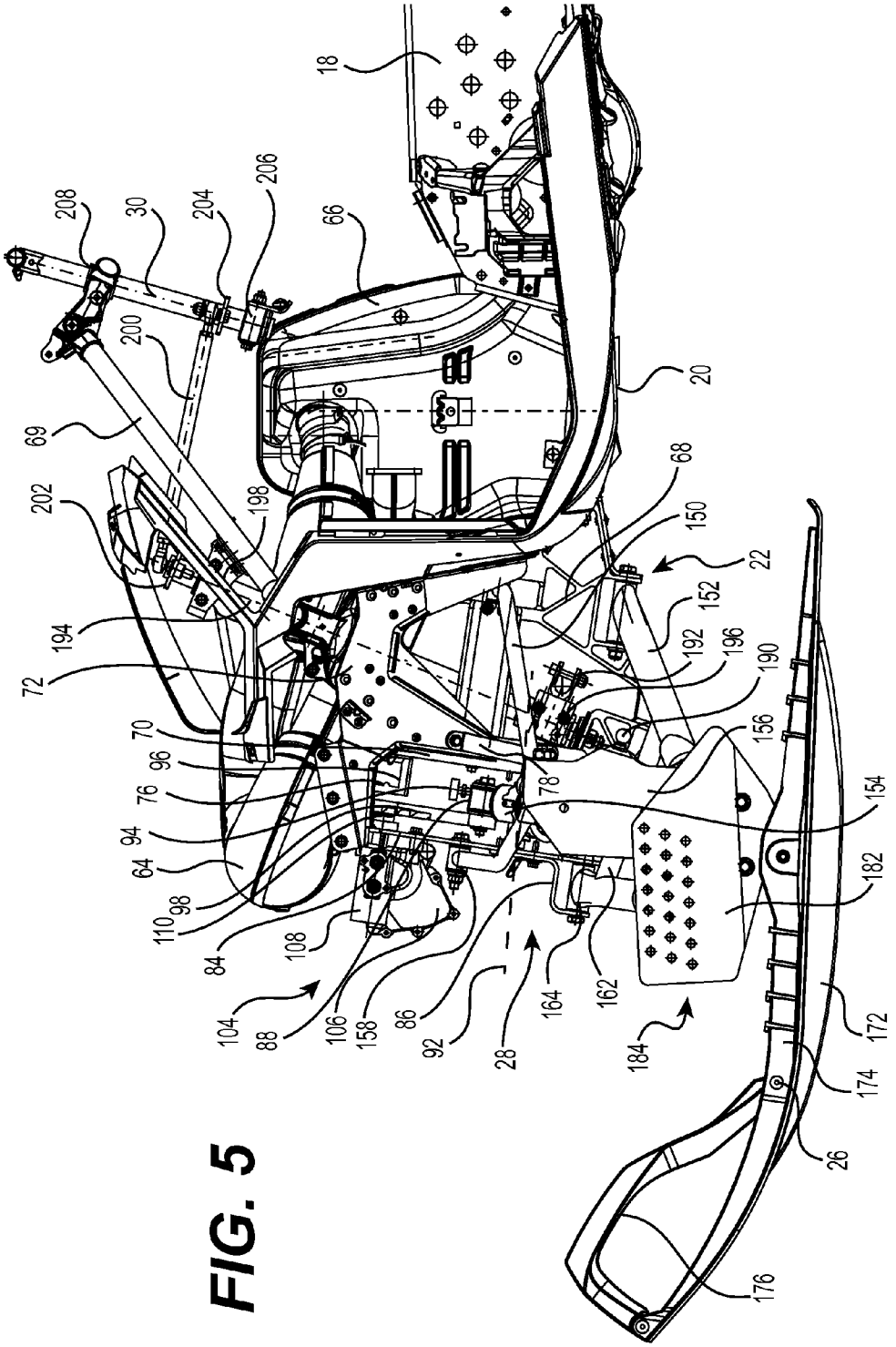
18
208
30
204
206
66
200
20
69
202
198
68
150
22
194
152
192
196
190
72
70
96
76
78
156
154
94
64
98
110
84
108
182
104
88
106
158
86
92
28
164
162
184
172
174
26
176

FIG. 5

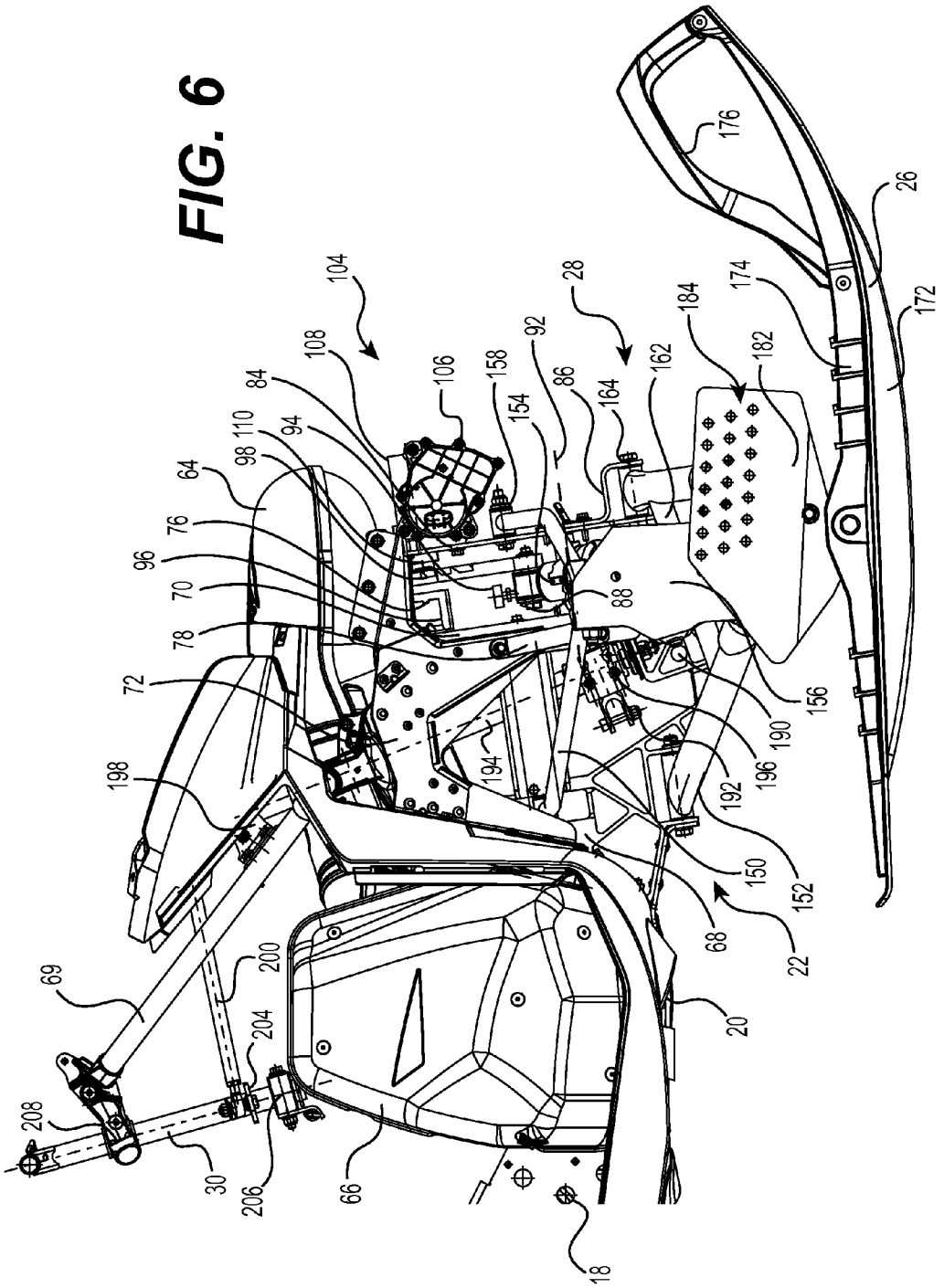
104
108
84
110
94
98
64
76
96
70
78
72
198
69
208
30
206
204
200
66
18
106
158
154
92
86
88
28
164
162
184
182
174
176
26
172
156
190
196
192
194
150
152
68
22
20

FIG. 6

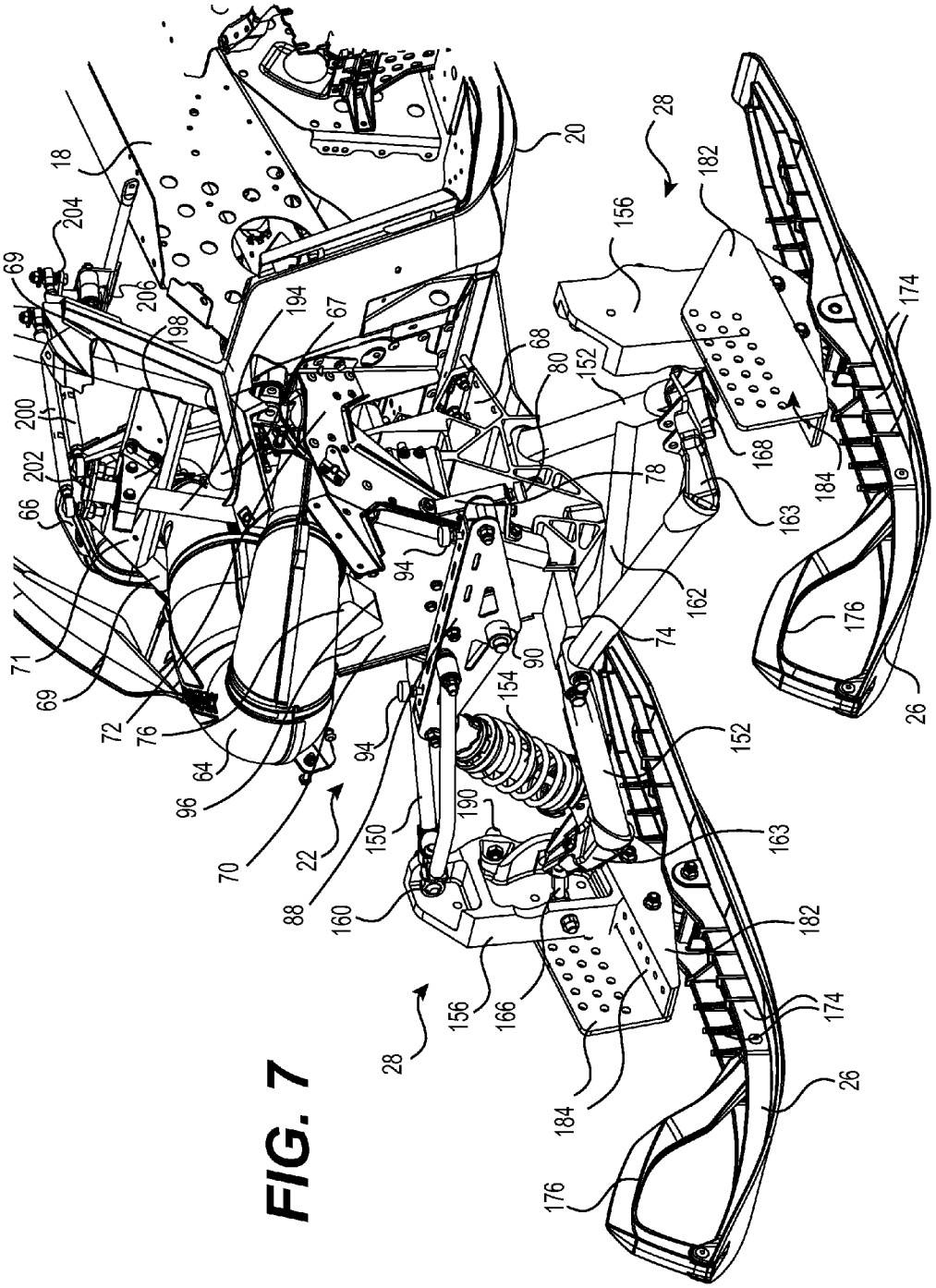
18
20
28
182
156
204
69
206
194
67
198
68
80
152
174
200
202
66
78
168
184
163
94
162
176
71
69
72
76
64
96
70
22
88
150
190
154
90
74
152
163
160
182
156
166
28
174
184
26
176
26

FIG. 7

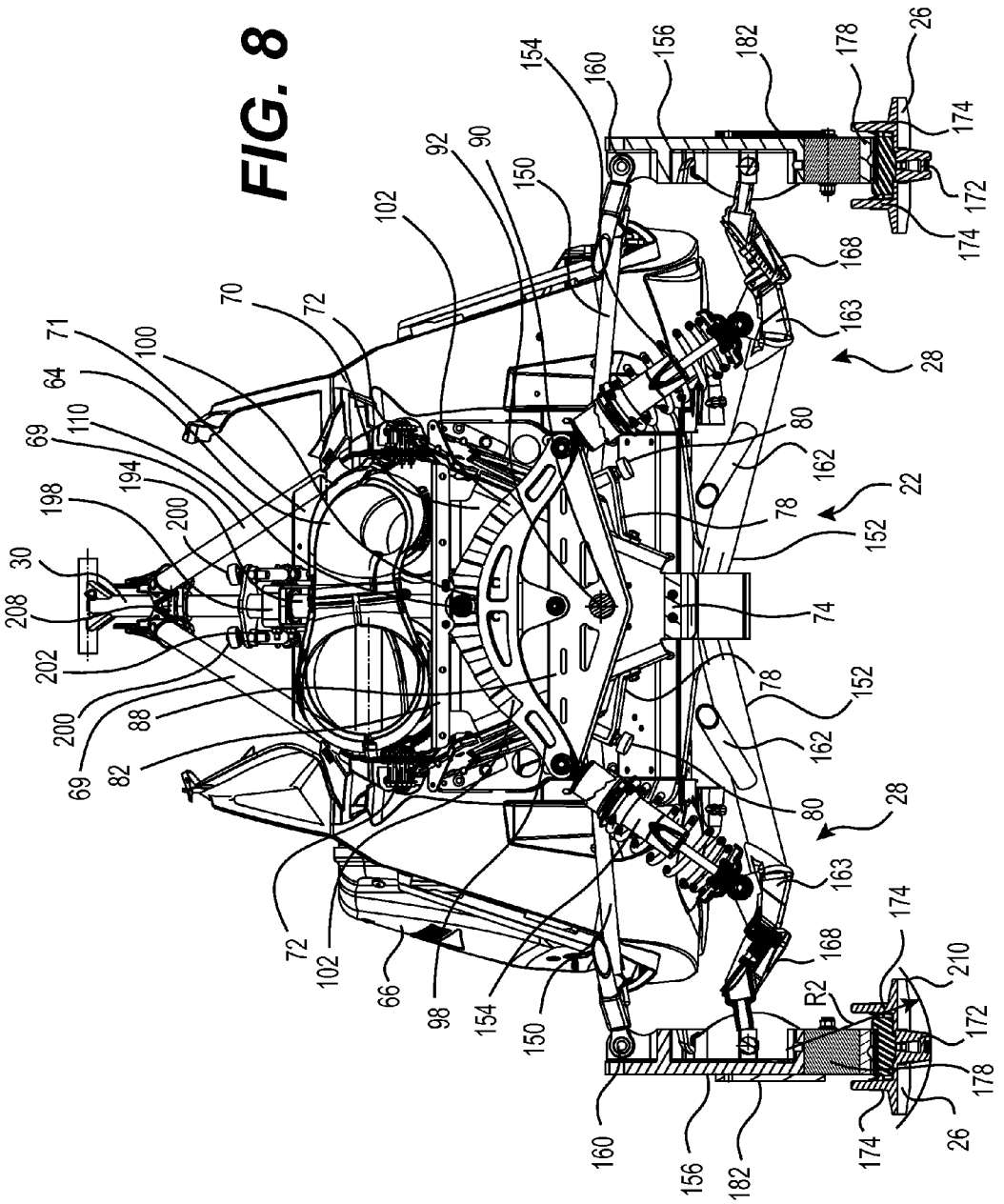
30
208
202
200
69
82
88
200
198
194
69
110
64
71
100
70
72
102
72
66
98
154
150
92
90
102
150
154
160
156
182
178
26
174
172
174
168
163
28
80
162
22
78
152
74
78
152
162
80
28
163
168
174
210
R2
172
178
26
174
160
156
182

FIG. 8

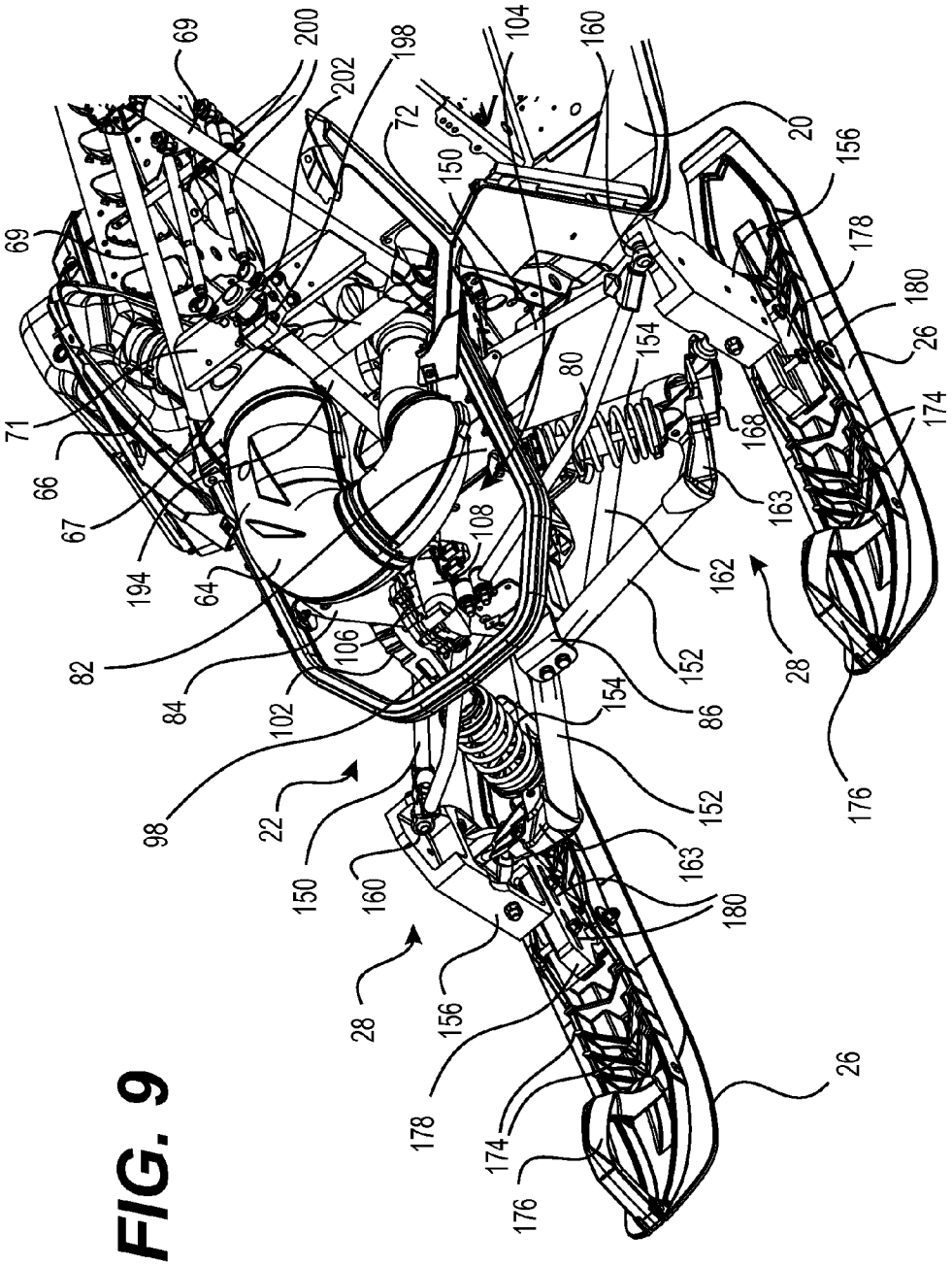
69
200
202
198
104
160
72
150
20
156
178
180
26
174
168
163
162
152
28
176
69
71
66
67
194
64
82
84
102
106
108
80
154
86
98
22
150
160
163
180
156
178
174
176
26
28

FIG. 9

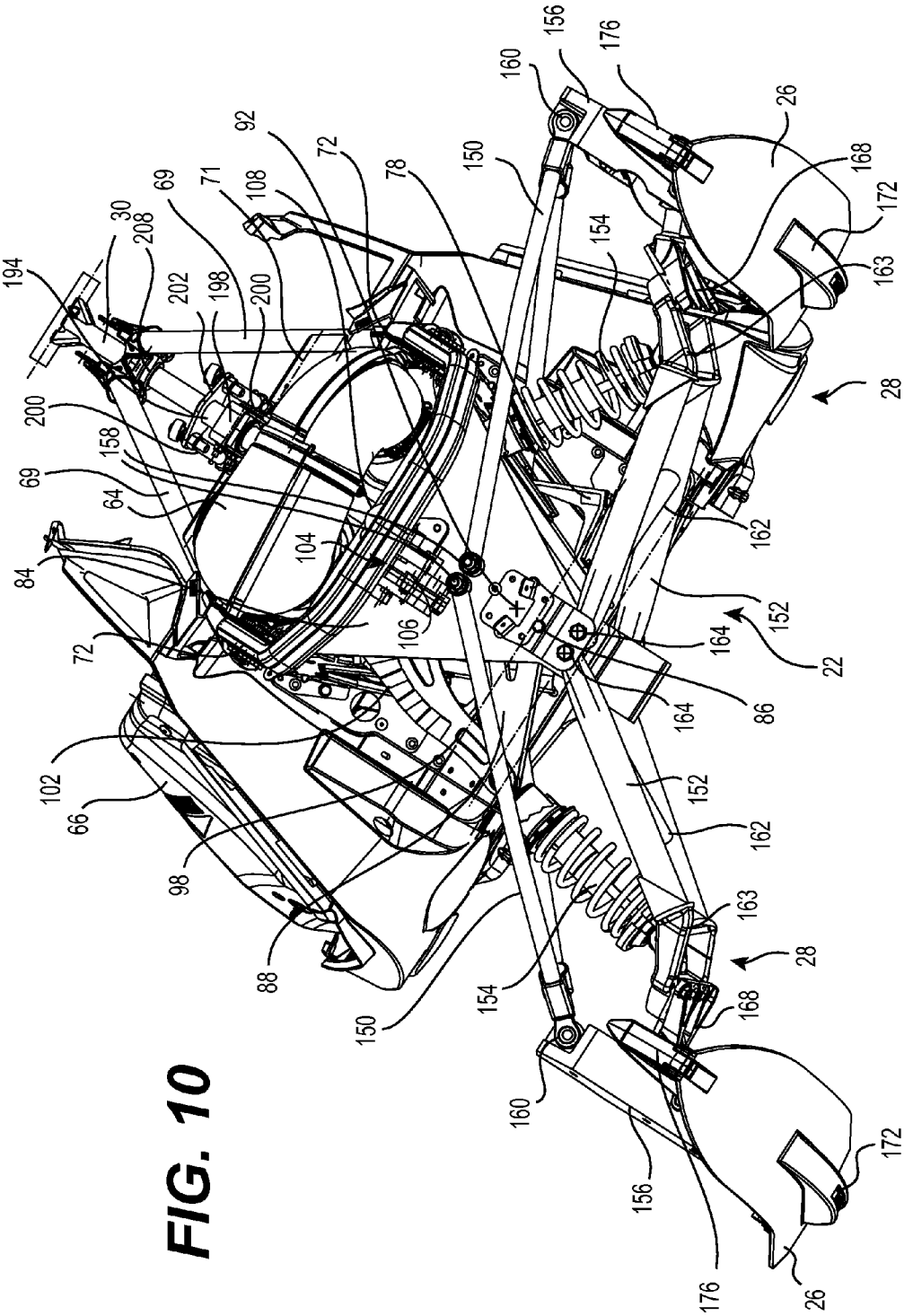
194
30
208
69
71
108
92
72
78
150
160
156
176
26
168
172
163
154
202
198
200
200
158
69
64
84
72
104
106
102
66
98
88
150
154
160
156
176
26
172
168
28
162
152
164
22
86
164
152
162
163
28

FIG. 10

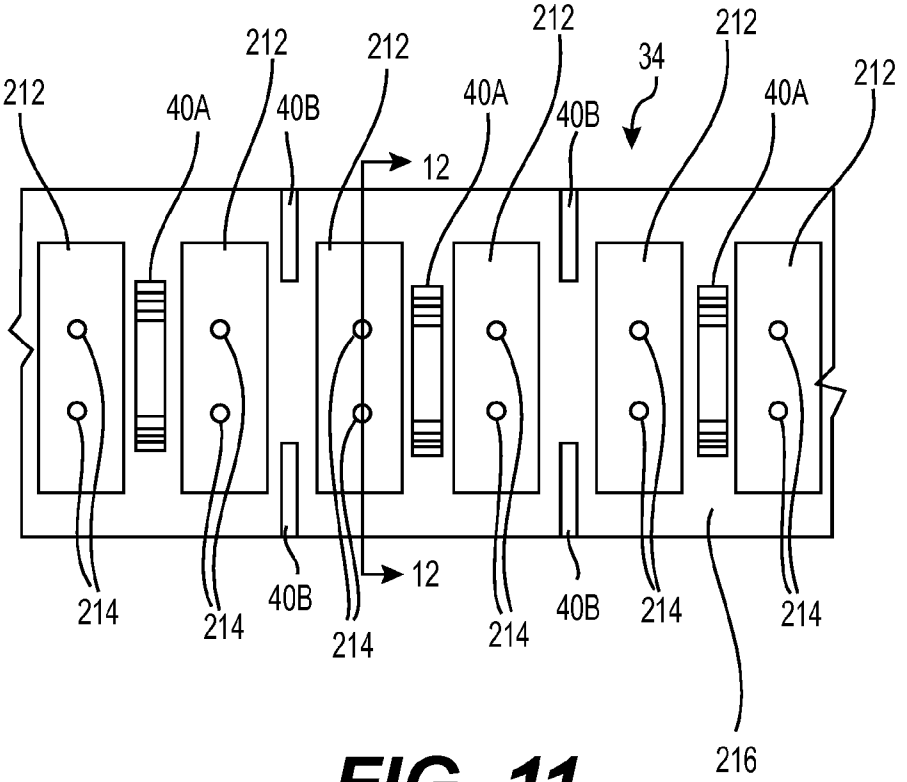
212
40A
212
40B
212
12
212
40A
40B
34
212
40A
212
214
214
40B
214
12
214
40B
214
214
216

FIG. 11

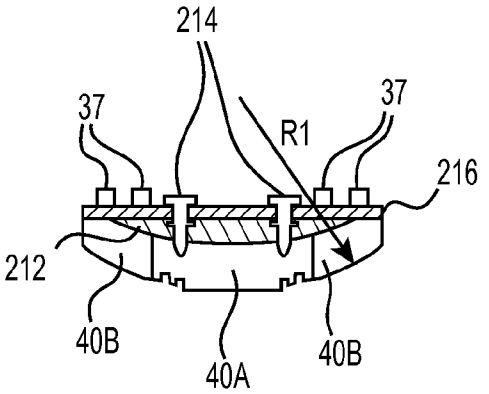
214
37
R1
37
216
212
40B
40A
40B

FIG. 12

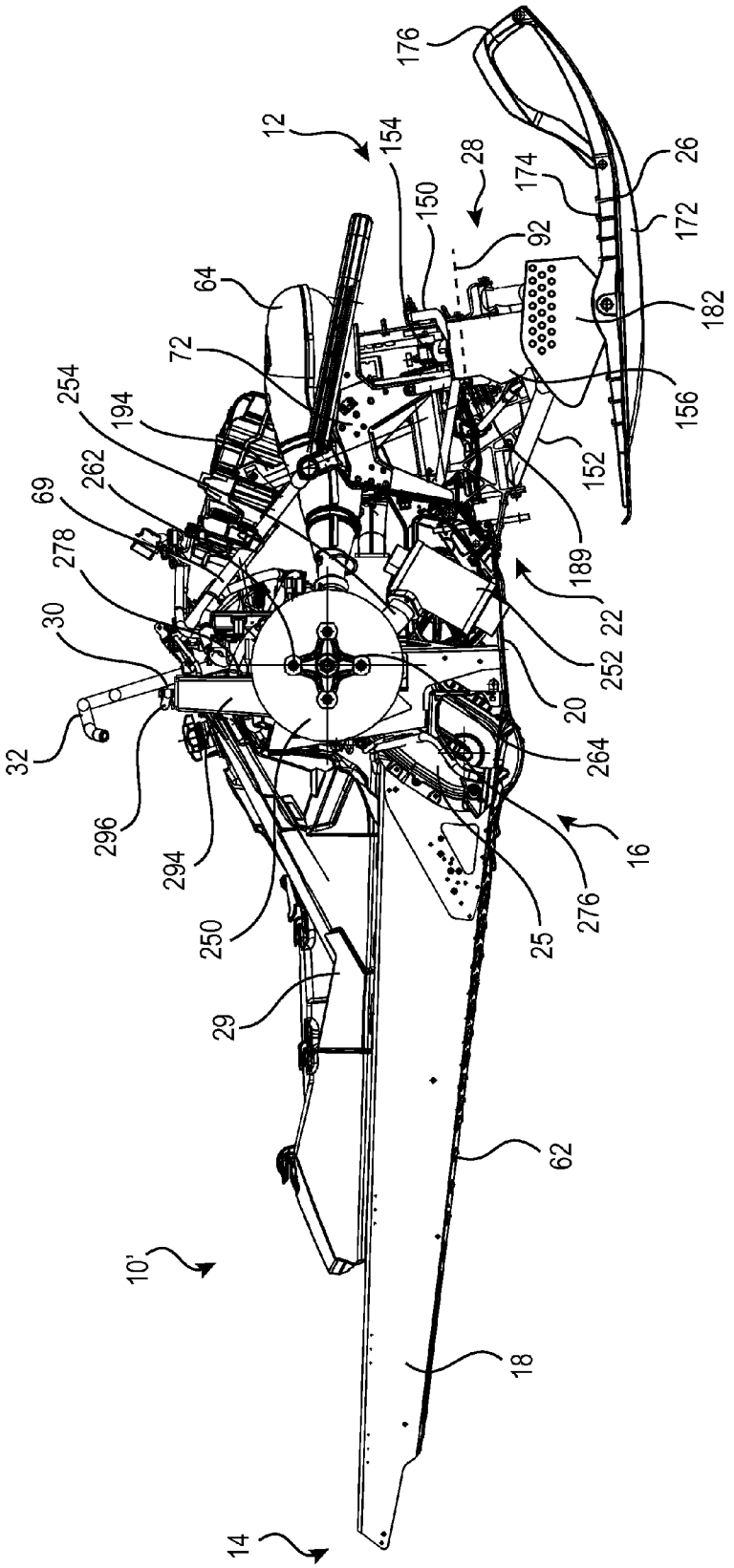
176
12
154
28
174
26
150
172
92
64
182
72
156
254
194
152
262
69
189
278
22
30
252
20
32
264
296
16
294
276
250
25
29
62
10'
18
14

FIG. 13

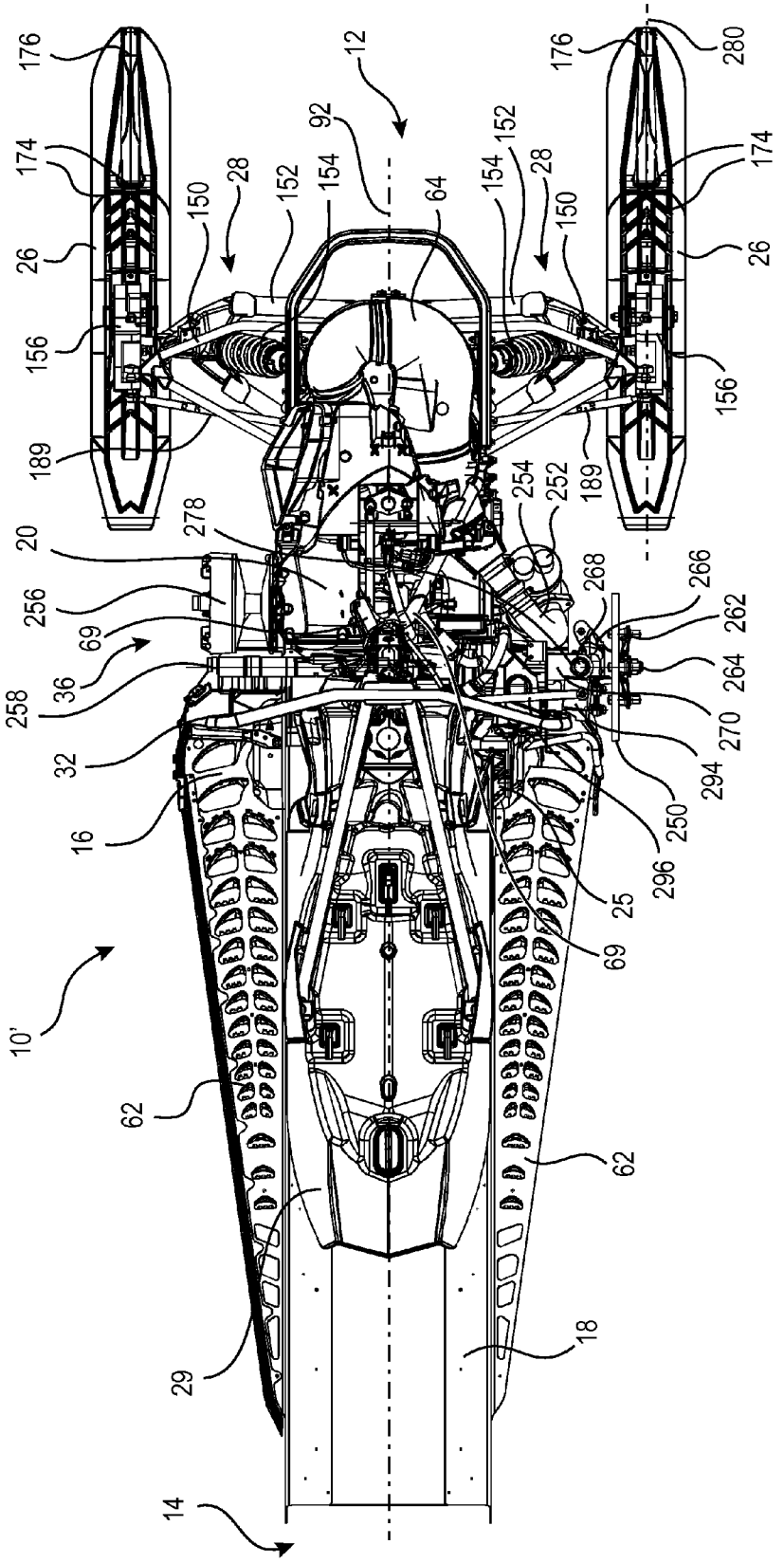
176
174
26
156
189
150
28
152
154
92
12
64
154
152
28
150
176
280
174
26
156
189
20
278
256
69
36
258
32
16
10'
62
29
14
254
252
268
266
262
264
270
294
250
296
25
69
62
18

FIG. 14

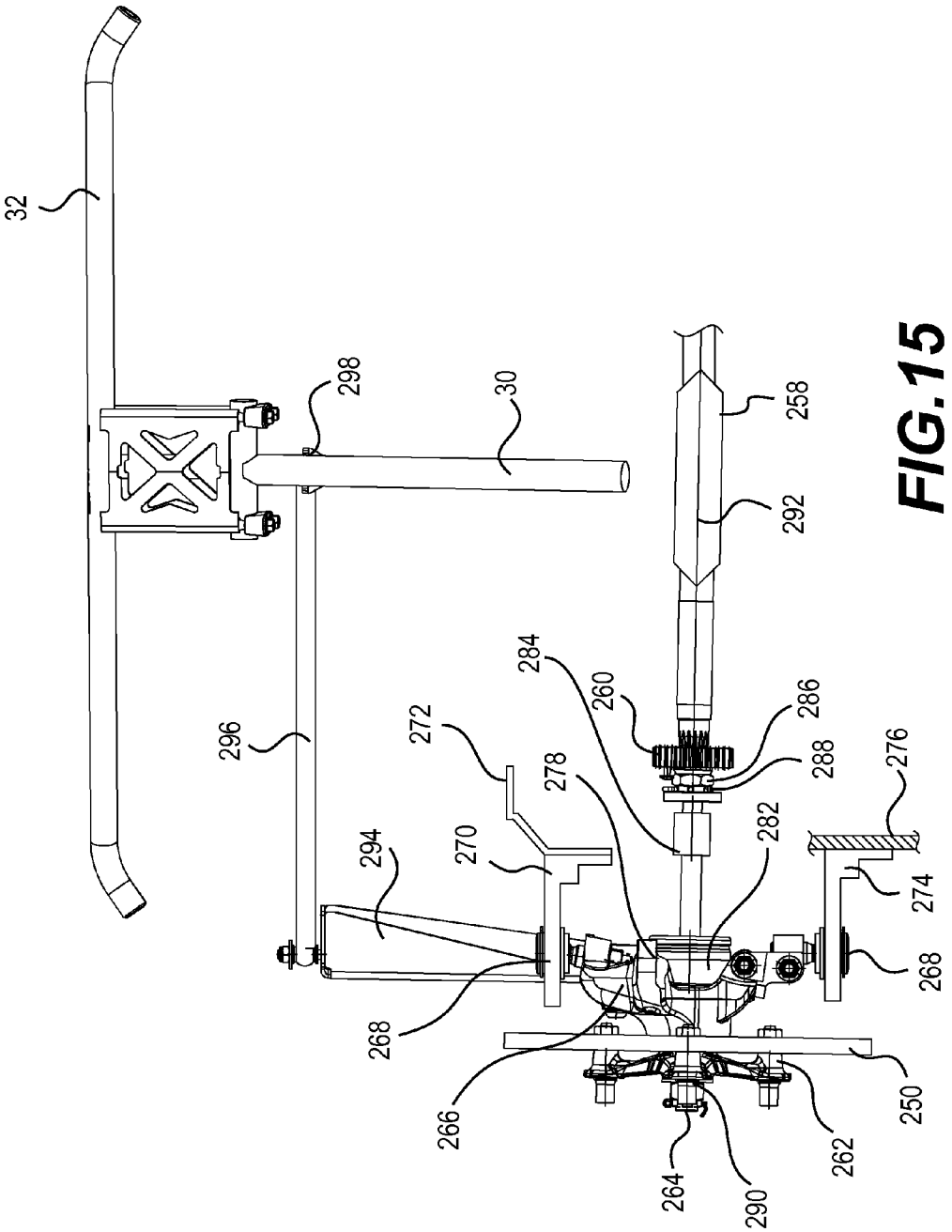
32
298
30
258
292
296
284
260
286
288
272
278
276
294
270
282
274
268
268
266
250
264
290
262

FIG.15

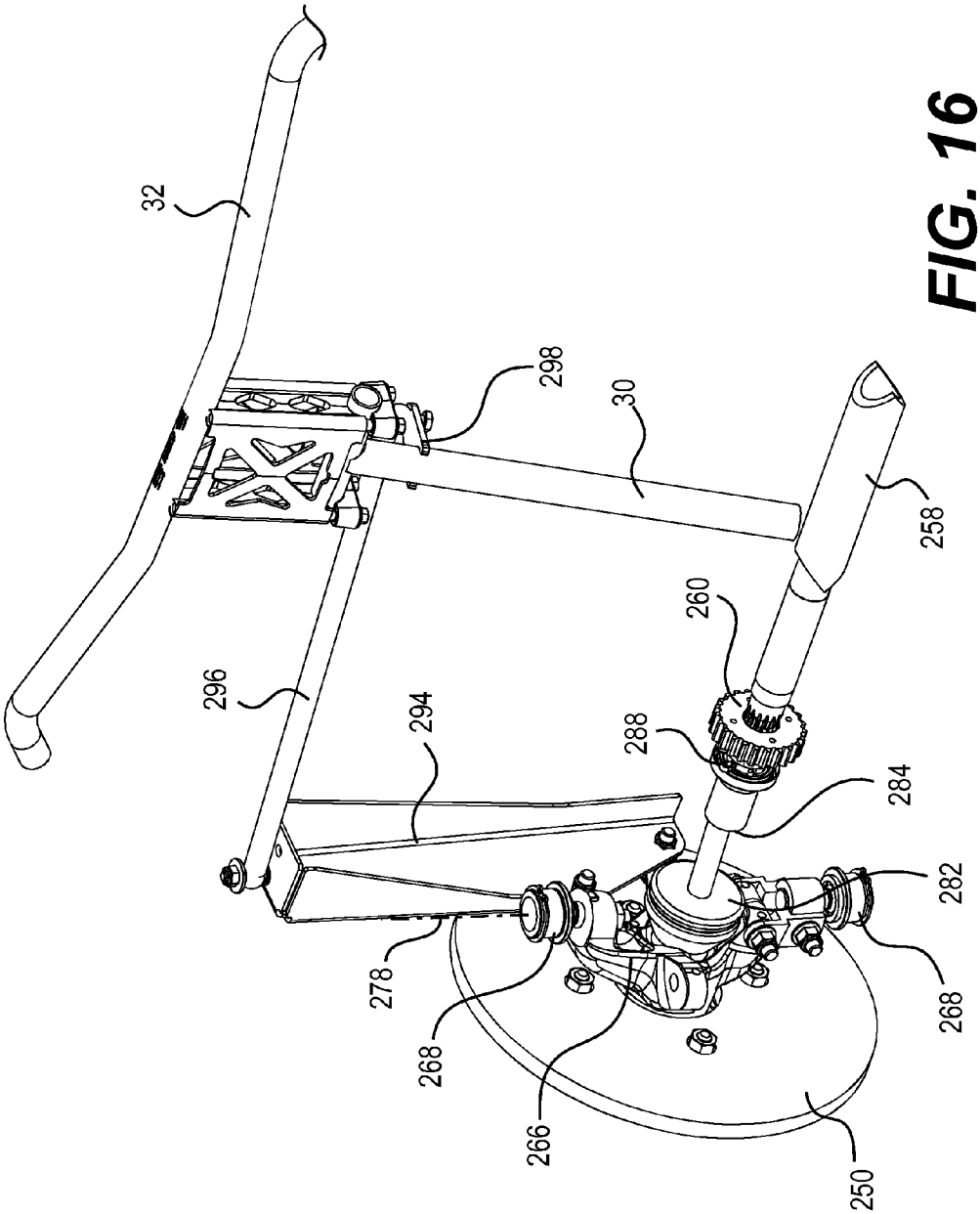

FIG. 16

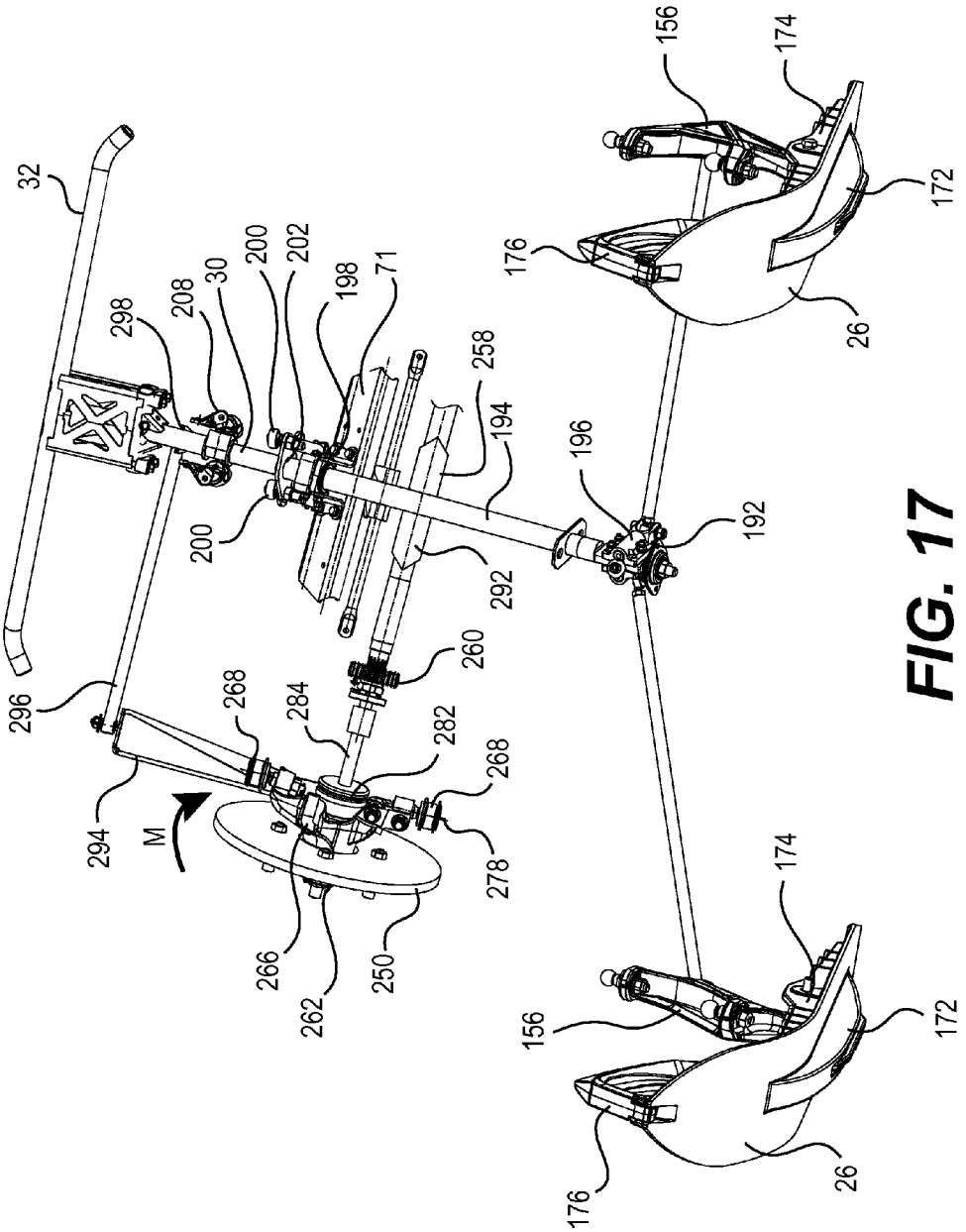
32
298
208
30
200
202
198
71
258
194
196
192
176
156
174
172
26
200
292
260
296
268
284
282
268
278
294
M
266
262
250
156
174
172
176
26

FIG. 17

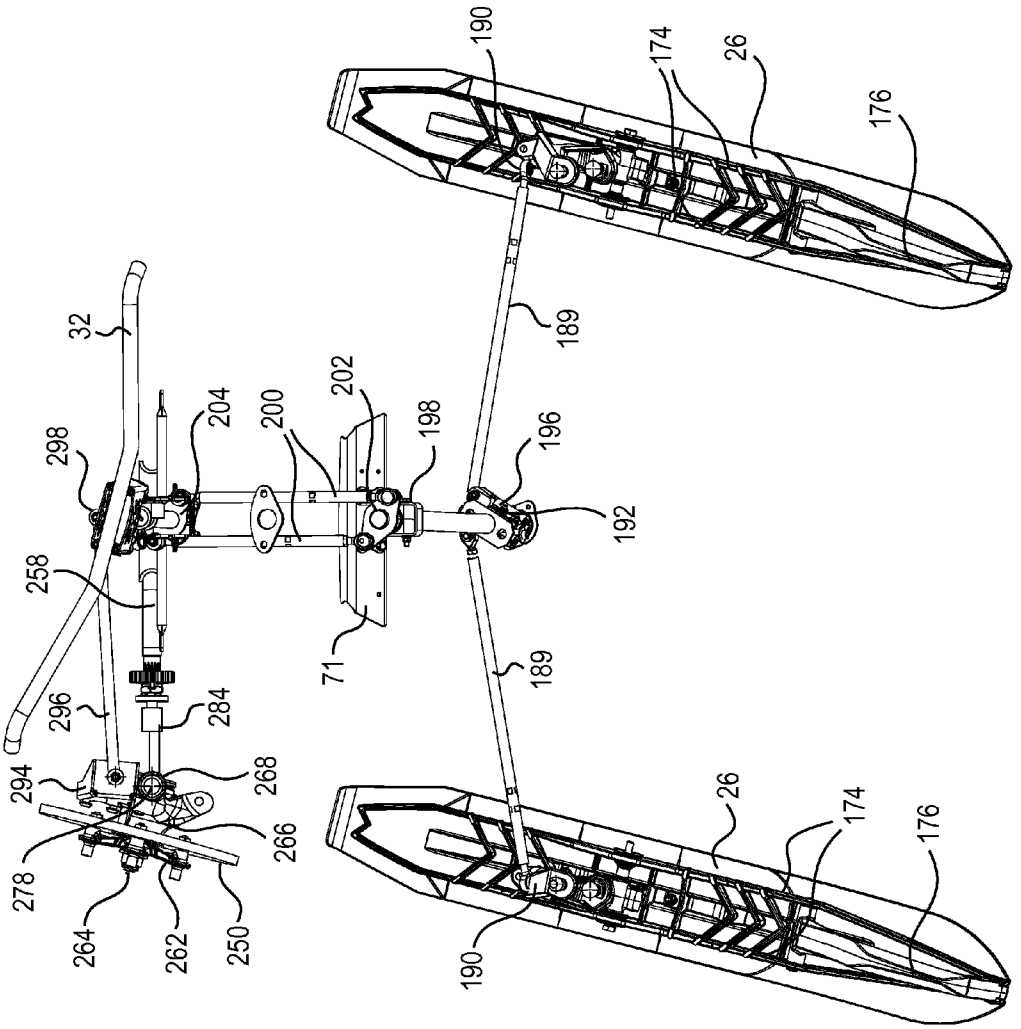
32
298
258
296
294
278
264
262
250
266
268
284
204
200
202
71
198
196
192
189
189
190
190
174
174
26
26
176
176

FIG. 18

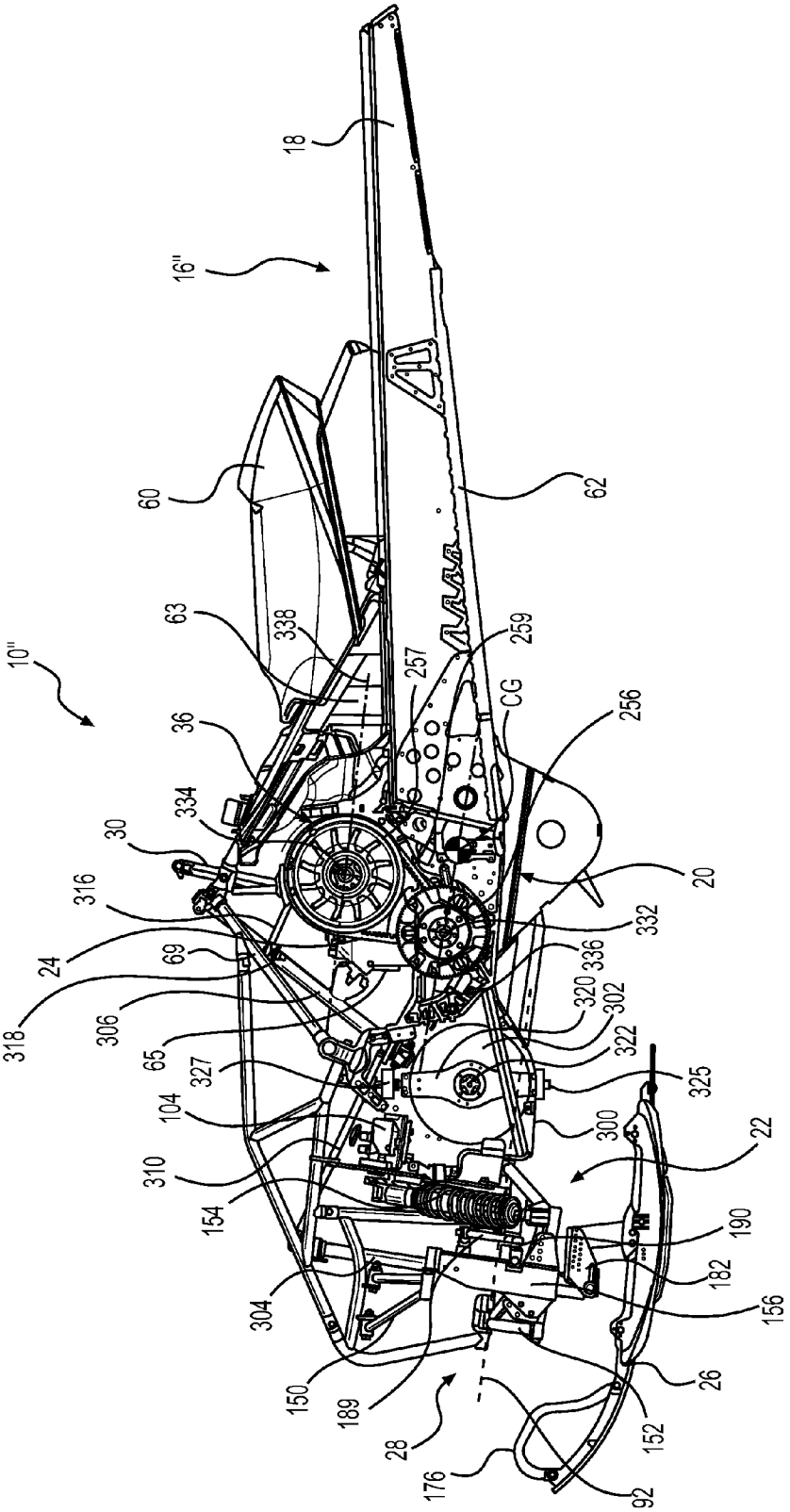
10"
16"
18
60
62
63
338
257
259
CG
256
36
334
30
316
24
69
318
306
65
327
104
310
154
304
150
189
28
176
92
152
26
156
182
190
22
300
325
322
302
320
336
332
20

FIG. 19

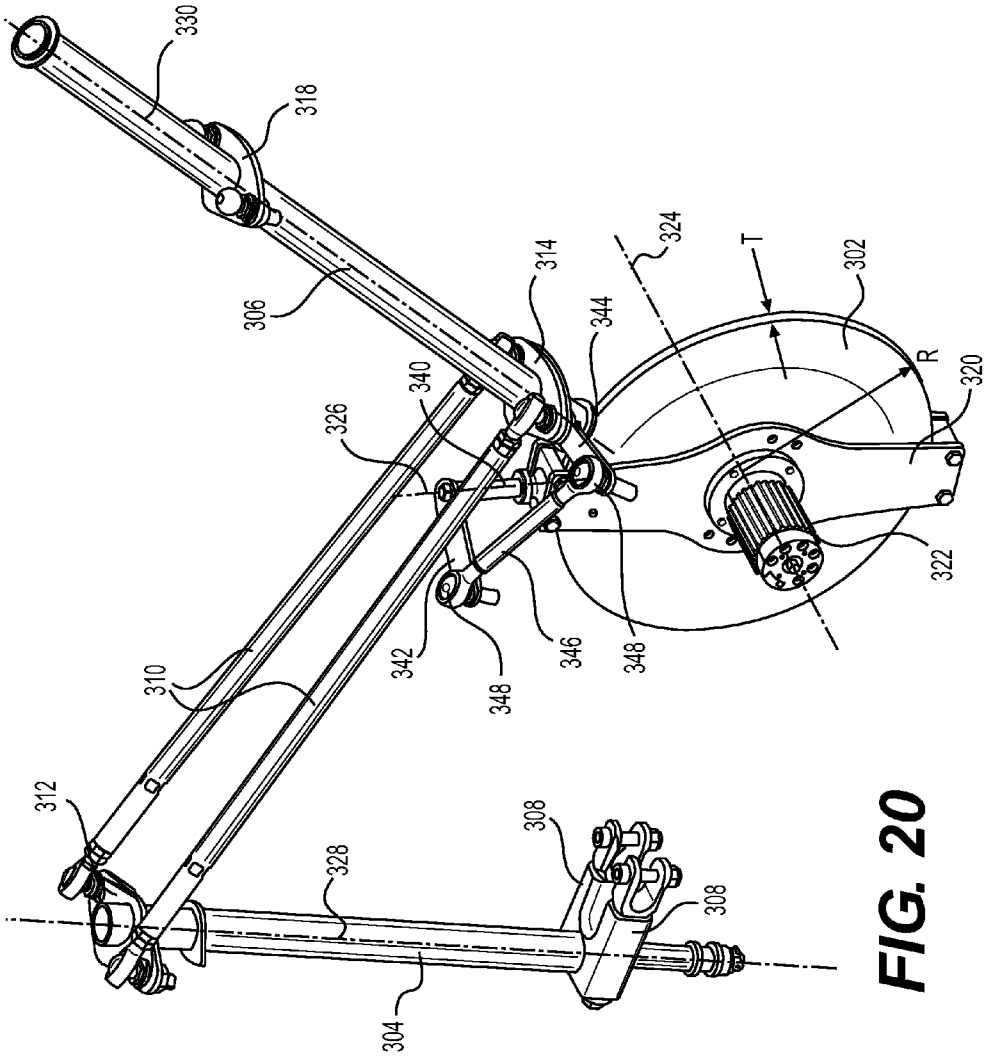
330
318
306
314
324
T
302
344
R
320
340
326
322
310
342
348
346
348
312
308
328
308
304

FIG. 20

VEHICLE HAVING AN INERTIA WHEEL

CROSS REFERENCE

The present application claims priority to U.S. Provisional Patent Application No. 61/731,859, filed Nov. 30, 2012, the entirety of which is incorporated herein by reference.

TECHNICAL FIELD

The present application relates to vehicles with inertia wheels.

BACKGROUND

Typically, snowmobiles have two front skis connected to a handlebar and a rear endless track connected to an engine to propel the snowmobile. In such typical snowmobiles, the snowmobile is steered by turning the handlebar in the direction in which the driver wants to turn. This is known as steer-in-direction. During a turn, the suspension assembly connected to the ski on the outside of the turn is compressed, causing the snowmobile to roll slightly toward the outside of the turn, which the driver can compensate by leaning toward the inside of the turn.

In other vehicles, such as motorcycles, the vehicle is steered by what is known by countersteering. In a motorcycle for example, the motorcycle turns by leaning in the direction of the turn. To achieve this leaning, the driver momentarily turns the handlebar in the direction opposite to the direction of the turn (i.e. the driver countersteers).

Driving a vehicle that can lean into a turn offers a much different driving experience than driving a vehicle that is steer-in-direction. It would be desirable to at least some drivers to have the driving experience of a leaning vehicle on a vehicle having three ground engaging members such as a snowmobile.

U.S. Pat. No. 7,648,148 B1, issued Jan. 19, 2010, and United States Patent Publication No. 2007/0176384 A1, published Aug. 2, 2007, the entirety of both of which is incorporated herein by reference, describe three-wheel vehicles that can lean in a turn. In vehicles of this type, the frame of the vehicle is pivotally connected to a shock tower (also known as a transfer frame) and the front shock absorbers associated with the two front wheels are connected at their upper end to the shock tower. During a turn, the frame pivots into the turn like on a motorcycle, but the shock tower remains essentially vertical. As a result, the front shock absorbers do not get compressed due to the leaning of the frame.

Leaning of such vehicles having three ground engaging member can be achieved in two ways. The first is assisted leaning in which an actuator actively pivots the frame relative to the shock tower based on signals received from one or more sensors on the vehicle, some examples of which are provided in U.S. Pat. No. 7,648,148 B1. The second is unassisted leaning, in which the pivoting of the frame relative to the shock tower is the result of the countersteering effected by the driver and the balancing of the forces acting on the vehicle during the turn.

One of the advantages of unassisted leaning over assisted leaning is that a vehicle with unassisted leaning is mechanically and electronically less complex than an assisted leaning vehicle as it does not require an actuator, its associated components, sensors and an electronic control system to control the actuator based on the signals from the sensors. However, one of the advantages of assisted leaning over unassisted leaning is that the actuator can be used to assist to initiate leaning of the frame relative to the shock tower and to return the frame in the upright position.

Also, unassisted leaning vehicles rely on the friction between the ground and the ground engaging members in order to achieve leaning of the vehicle and for returning the vehicle to the upright position. Therefore, when the vehicle operates on a low friction ground surface, such as ice or snow, the friction between the ground and the ground engaging member may be insufficient to prevent the ground engaging members from sliding sideways which may lead to the vehicle tipping over or understeering.

As such, there is a need for a system for complementing the torques generated when countersteering in order to lean a frame of an unassisted leaning vehicle having at least three ground engaging members and to return the frame to an upright position.

SUMMARY

One object of the present invention is to ameliorate at least some of the inconveniences of the prior art.

In one aspect, a vehicle has a frame having a front portion and a rear portion, a straddle seat mounted on the frame, a motor supported by the frame, a belt transmission system operatively connected to and driven by the motor, a front left suspension assembly and a front right suspension assembly operatively connected to the front portion of the frame, a front left ground engaging member operatively connected to the front left suspension assembly, a front right ground engaging member operatively connected to the front right suspension assembly, a rear suspension assembly connected to the rear portion of the frame, and a rear ground engaging member operatively connected to the rear suspension assembly. At least one of the ground engaging members is driven by the belt transmission system. A steering assembly operatively is connected to the front left ground engaging member and the front right ground engaging member to steer the vehicle. The steering assembly has a steering column supported by the frame and a handlebar connected to the steering column. An inertia wheel is operatively connected to the steering assembly. The inertia wheel pivots about a generally vertical axis when the handlebar is turned to steer the front left and right ground engaging members. The inertia wheel pivots about the vertical axis in a same direction as the front left and right ground engaging members when steered by the handlebar.

In an additional aspect, a link operatively connects the steering column to the inertia wheel.

In a further aspect, the link is operatively connected at a first end to the steering column about a first point that is offset from a steering column axis defined by the steering column. The link is operatively connected at a second end to the inertia wheel about a second point that is offset from the vertical axis.

In an additional aspect, the link has a first end and a second end. The first end of the link is operatively connected to the steering column about a first point that is offset from a steering column axis defined by the steering column. The second end of the link is operatively connected to the inertia wheel about a second point that is offset from the vertical axis. A joint is operatively connected to the belt transmission system. An axle connects the joint to the inertia wheel. A gimbal rotationally supports the axle and the joint therein. The gimbal is pivotable about the vertical axis together with the inertia wheel. The gimbal is connected to the second end of the link.

In a further aspect, the inertia wheel and the rear ground engaging member rotate in a same direction when the vehicle is in operation.

In an additional aspect, the frame is pivotable about a longitudinally extending pivot axis. A center of the inertia wheel is vertically higher than the pivot axis at least when the vehicle is in an upright position.

In a further aspect, a shock tower is pivotally connected to the front portion of the frame. The frame is pivotable relative to the shock tower about a pivot axis between an upright position and a plurality of leaning positions. Each of the front left suspension assembly and the front right suspension assembly includes a shock absorber connected at one end to the shock tower.

In an additional aspect, a laterally extending countershaft is operatively connected to and driven by the belt transmission system. A reduction is drive operatively connected to and driven by the countershaft. The inertia wheel rotates about an inertia wheel axis and the countershaft rotates about a countershaft axis. The inertia wheel axis and the countershaft axis are coaxial when the vehicle is steered in a straight ahead direction.

In a further aspect, the vertical axis is disposed in a vertical plane containing a longitudinal centerline of the vehicle when the vehicle is steered in a straight ahead direction.

In an additional aspect, the vehicle is a snowmobile. The rear portion of the frame includes a tunnel. The front left ground engaging member is a left ski. The front right ground engaging member is a right ski. The rear ground engaging member is an endless track disposed at least in part under the tunnel.

In a further aspect, the endless drive track has a generally arcuate lateral profile.

In an additional aspect, an electric motor is operatively connected to the inertia wheel and drives the inertia wheel.

In a further aspect, the inertial wheel is operatively connected to and driven by the belt transmission system.

For purposes of this application, terms related to spatial orientation such as forwardly, rearwardly, upwardly, downwardly, left, and right, are as they would normally be understood by a driver of the vehicle sitting thereon in a normal riding position. Also, the term "ground engaging member" refers to a component of a vehicle making contact with the ground to permit displacement of the vehicle over the ground. Examples of ground engaging members include, but are not limited to, skis, wheels and endless tracks. The definitions of terms in the present application take precedence over the definitions of the same terms in documents incorporated herein by reference.

Embodiments of the present invention each have at least one of the above-mentioned object and/or aspects, but do not necessarily have all of them. It should be understood that some aspects of the present invention that have resulted from attempting to attain the above-mentioned object may not satisfy this object and/or may satisfy other objects not specifically recited herein.

Additional and/or alternative features, aspects, and advantages of embodiments of the present invention will become apparent from the following description, the accompanying drawings, and the appended claims.

BRIEF DESCRIPTION OF THE DRAWINGS

For a better understanding of the present invention, as well as other aspects and further features thereof, reference is made to the following description which is to be used in conjunction with the accompanying drawings, where:

FIG. **1** is a left side elevation view of a leaning snowmobile;

FIG. **2** is a left side elevation view of a frame, front suspension assemblies, skis and exhaust system of the snowmobile of FIG. **1**;

FIG. **3** is a perspective view taken from a front left side of a front portion of the snowmobile components of FIG. **2**;

FIG. **4** is a front elevation view of the snowmobile components of FIG. **2**;

FIG. **5** is a left side elevation view of a front portion of the snowmobile components of FIG. **2**;

FIG. **6** is a right side elevation view of a front portion of the snowmobile components of FIG. **2**;

FIG. **7** is a perspective view taken from a front left side of a front portion of the snowmobile components of FIG. **2**, with a portion of the frame and of the left suspension assembly removed;

FIG. **8** is a cross-sectional view of the snowmobile components of FIG. **2** taken through line **8-8** of FIG. **2**;

FIG. **9** is a perspective view taken from a front left side of a front portion of the snowmobile components of FIG. **2** shown leaning toward a left side;

FIG. **10** is a front elevation view of the snowmobile components of FIG. **2** shown leaning toward a left side;

FIG. **11** is a schematic plan view of an outer portion of an alternative embodiment of a track for the snowmobile of FIG. **1**; and

FIG. **12** is a cross-sectional view of the track of FIG. **11** taken through line **12-12** of FIG. **11**;

FIG. **13** is a right side elevation view of a frame, front suspension assemblies, skis and exhaust system of an alternative embodiment of the snowmobile of FIG. **1** having an inertia wheel;

FIG. **14** is a top plan view of the snowmobile components of FIG. **13**;

FIG. **15** is a front elevation view of the inertia wheel and associated components of the snowmobile of FIG. **13**;

FIG. **16** is a perspective view of the inertia wheel and associated components of FIG. **15** with gimbal support brackets removed for clarity;

FIG. **17** is a front elevation view of a steering system, inertia wheel and skis of the snowmobile of FIG. **13** shown leaning toward a left side with the handlebar being counter-steered toward the right side;

FIG. **18** is a top perspective view of FIG. **17**;

FIG. **19** is a left side elevation view of a frame, front suspension assemblies, and skis of an alternative embodiment of the snowmobile of FIG. **1** having an inertia wheel; and

FIG. **20** is a perspective view taken from a rear, left side of the inertia wheel, its associated components and portions of a steering system of the snowmobile of FIG. **19**.

DETAILED DESCRIPTION

A leaning snowmobile **10** will be described below. It should be understood that aspects of the leaning snowmobile **10** could be applied to other types of leaning vehicles having three or more ground engaging members such as, but not limited to, a three-wheeled vehicle having left and right front wheels and one laterally centered rear wheel.

Referring to FIG. **1**, the snowmobile **10** will be described. The snowmobile **10** has a front end **12** and a rear end **14**, which are defined consistently with the forward travel direction of the snowmobile. The snowmobile **10** has a frame **16** that includes a tunnel **18**, an engine cradle portion **20** (FIG. **2**) and a front suspension assembly portion **22**. An engine **24**, which is schematically illustrated in FIG. **1**, is carried by the engine cradle portion **20** of the frame **16**. The engine **24** is a two-stroke, two-cylinder internal combustion engine having,

but it is contemplated that the engine **24** could be any type of motor, such as, for example, a four-stroke internal combustion engine or an electric motor. A ski and steering assembly is provided, in which two skis **26** are positioned at the front end **12** of the snowmobile **10**, and are attached to the front suspension assembly portion **22** of the frame **16** through front suspension assemblies **28** that will be described in greater detail below. The skis **26** are operatively connected to a steering assembly including a steering column **30** and a handlebar **32** as will be described in greater detail below.

An endless drive track **34** is positioned at the rear end **14** of the snowmobile **10** and is disposed under the tunnel **18**. The endless drive track **34** is operatively connected to the engine **24** through a reduction drive **25** (not shown in this embodiment, but it is the same as the one shown in the alternative embodiment of FIGS. **13** and **14**) and a belt transmission system **36** which is schematically illustrated by broken lines. The belt transmission system **36** is a continuously variable transmission (CVT), but other types of belt transmission systems are contemplated. Drive sprockets (not shown) disposed at a front of the tunnel **18** inside the drive track **34** are driven by the reduction drive **25** and engage drive lugs **37** (FIG. **12**) extending from an inner surface of the drive track **34** and/or apertures (not shown) formed along the length of the drive track **34**. Thus, the endless drive track **34** is driven to run about a rear suspension assembly **38** for propulsion of the snowmobile **10**. Terrain lugs **40** (only some of which have been labelled for clarity) are disposed circumferentially about the outer side of the drive track **34** to provide traction to the drive track **34**. The specific distribution pattern and dimensions of the terrain lugs **40** will vary depending on the application and desired characteristics of the drive track **34**. The rear suspension assembly **38** is connected to the tunnel **18**. The rear suspension assembly **38** includes a pair of slide rails **42**, a front transverse shaft (not shown) connected to the tunnel **18**, a shock absorber **44** connected between the front transverse shaft and the slide rails **42**, and front suspension arms **46** connected between the front transverse shaft and the slide rails **42**. The rear suspension assembly **38** also includes a rear transverse shaft (not shown) connected to the tunnel **18**, a shock absorber **48** connected between the rear transverse shaft and the slide rails **42**, rear suspension arms **50** connected between the rear transverse shaft and the slide rails **42**, and torsion springs **52** (only partially shown) disposed around the rear transverse shaft and having an end supported by the slide rails **42**. A number of wheels **54** are connected to the slide rails **42** and the front and rear transverse shaft and roll along the inner surface of the endless drive track **34** when the snowmobile **10** is in movement. The above-described rear suspension assembly **38** is one possible embodiment of a rear suspension assembly that can be used with the snowmobile **10**. It is contemplated that other embodiments of rear suspension assemblies can be used with the snowmobile **10**.

At the front end **12** of the snowmobile **10**, there are provided fairings **56** that enclose the engine **24**, the reduction drive **25** and the belt transmission system **36**, thereby providing an external shell that not only protects these components, but also make the snowmobile **10** more aesthetically pleasing. The fairings **56** include one or more panels that can be opened to allow access to the engine **24**, the reduction drive **25**, the belt transmission system **36** and other components of the snowmobile **10** disposed inside the fairings **56**. A windshield **58** is connected to the fairings **56** near the front end **12** of the snowmobile **10**, or may alternatively be attached directly to the handlebar **32**. The windshield **58** acts as a windscreen to lessen the force of the air on the rider while the snowmobile **10** is moving.

A seat **60** is connected to and disposed on the tunnel **18**. Two footrests **62** extend laterally from the tunnel **18** on opposed sides of the snowmobile **10** below the seat **60** to accommodate the rider's feet.

The engine **24** receives fuel from a fuel supply system (not shown) including a fuel tank **63** (not shown in this embodiment, but it is the same as the one shown in the alternative embodiment of FIGS. **13** and **14**) mounted on the tunnel **18** and fuel injectors (not shown). Air is supplied to the engine **24** by an air intake system (not shown) including an airbox, a throttle body disposed downstream of the air box, and an air intake manifold fluidly communicating the throttle body with air intake ports (not shown) of the engine **24** disposed on a rear side thereof. Other embodiments of air intake systems are contemplated. For example, one throttle body could be provided per cylinder of the engine **24**, and as such the air intake manifold is omitted and, if necessary, replaced by one air intake pipe per cylinder for fluidly communicating each throttle body to its corresponding air intake port. Exhaust gases exit the engine **24** via the exhaust ports (not shown in the present embodiment, but shown as reference number **65** in the embodiment of FIG. **19**) of the engine **24** disposed on a front side thereof. From the exhaust ports, the exhaust gases flow into an exhaust manifold (not shown), then into an exhaust pipe in the form of a tuned pipe **64** (FIG. **2**), a muffler **66** (FIG. **2**) and finally out to the atmosphere. As can be seen in FIGS. **2** to **10**, the tuned pipe **64** is generally U-shaped and extends in part over the suspension assembly portion **22** and the muffler **66** is disposed on a right side of the engine cradle **20**. As best seen in FIG. **9**, from the exhaust manifold, the tuned pipe **64** extends forward under a cross bar **67** of the frame **16** on a left side of a steering column **194** (described in greater detail below). The tuned pipe **64** then extends to the right and then rearward. As it extends rearward, the tuned pipe **64** passes to the right of the steering column **194** and over the cross bar **67** through the generally triangular surface area defined by the cross bar **67** and left and right frame members **69**. As can be seen, from the ends of the cross bar **67**, the left and right frame members **69** extend rearward, upward and toward a lateral center of the frame **16**. The rearward extending portion of the tuned pipe which extends over the cross bar **67** also extends under a cross member **71** extending between the frame members **69**. The outlet of the tuned pipe **64** is connected to the muffler **66**. As best seen in FIG. **6**, a portion of the tuned pipe **64** is vertically higher than the muffler **66**. Other embodiments of exhaust systems are contemplated.

Turning now to FIGS. **2** to **10**, the suspension assembly portion **22** will be described in more detail. The suspension assembly portion **22** has a metallic extruded frame member **68** fastened to the front of the engine cradle **20**. The extruded frame member **68** is laterally centered. It is contemplated that the extruded frame member **68** could be replaced by a plurality of beams, tubes and/or brackets that are fastened, bonded or welded together. A sheet metal plate **70** is disposed forwardly of the extruded frame member **68** and is fastened along its top to the extruded frame member **68**. Side plates **72** are fastened to the left and right sides of the extruded frame member **68** and to the front of the engine cradle **20**. The plate **70** has side tabs disposed between the side plates **72** and the extruded frame member **68** and, as such, the tabs are fastened to the extruded frame members **68** by the fasteners used to fasten the side plates to the extruded frame member **68**. The lower portion of the plate **70** is disposed between a beam **74** and the extruded frame member **68**. The beam **74** is fastened to the extruded frame member **68** by fasteners passing through the lower portion of the plate **70**. A triangular member **76** (FIG. **7**) is fastened to the front of the upper part of the

plate **70** and is laterally centered. Left and right stopper holders **78** are fastened to the side plates **72** and the side tabs of the plate **70** on either side of the suspension assembly portion **22**. Left and right stoppers **80** are fastened to and extend downwardly from their respective stopper holders **78**. It is contemplated that the stoppers **80** could be integrally formed with the stopper holders **78** or some other portion of the suspension assembly portion **22**. In the illustrated embodiment, the stoppers **80** have a cylindrical metal core with a rubberized outer shell, but other types of stoppers are contemplated. A sheet metal top plate **82** is fastened between the upper forward portions of the side plates **72**. A sheet metal front plate **84** is fastened along its upper edge to the front of the top plate **82** and along its lower edge to the front of the beam **74**. As can be seen, the front plate **84** is spaced from the plate **70** and the front plate **84**, plate **70**, beam **74** and top plate **82** define a cavity therebetween. A bracket **86** is fastened to the lower portion of the front plate **84** and has a tab that is longitudinally spaced from the front plate **84**. It is contemplated that the components of the suspension assembly portion **22** could be made of materials other than metal. For example, it is contemplated that at least some the components of the suspension assembly portion **22** could be made of plastic or composite material. It is also contemplated that the components of the suspension assembly portion **22** could be bonded, welded or integrally formed with each other instead of being fastened. It is also contemplated that one or more of the plates **70**, **82**, **84** could be replaced by one or more beams, tubes and/or brackets that are fastened, bonded or welded together.

A shock tower **88** is disposed between the plates **70** and **84**. As a result, and as can be seen in FIGS. **5** and **6**, a portion of the tuned pipe **64** extends forwardly of the shock tower **88**. The shock tower **88** is fixedly mounted onto a shaft **90** (FIG. **7**). The ends of the shaft **90** are disposed inside bearings (not shown). The front bearing is received in an aperture (not shown) in the plate **84** and the rear bearing is received in an aperture in the plate **70** (not shown). As a result, and as will be described in greater detail below, the shaft **90** and the shock tower **88** can pivot about a pivot axis **92** relative to the frame **16** of the snowmobile **10**. The pivot axis **92** is laterally aligned with the longitudinal centerline of the snowmobile **10** when the frame **16** is in an upright position (i.e. the position of the frame shown in FIGS. **2** to **8**). The shock tower **88** is generally triangular in shape, but other shapes are contemplated. For example, the shock tower **88** could be generally T-shaped with a horizontal bar of the T being at a top of the shock tower **88**. As best seen in FIG. **7**, left and right stoppers **94** are fastened to the top of the shock tower **88**. The stoppers **94** are positioned along the top of the shock tower **88** such that when the frame **16** leans by a predetermined angle relative to the shock tower **88**, the corresponding stopper **94** (i.e. the left stopper **94** when the frame **16** leans left and the right stopper **94** when the frame **16** leans right) makes contact with a corresponding one of the contact surfaces **96** (FIG. **7**) defined by the triangular member **76**, as will be described in greater detail below. In the illustrated embodiment, the stoppers **94** have a cylindrical metal core with a rubberized outer shell, but other types of stoppers are contemplated. It is contemplated that the stoppers **94** could be integrally formed with the shock tower **88**. It is also contemplated that the stoppers **94** could be connected to the triangular member **76**, or some other portion of the suspension assembly portion **22**, and that the contact surfaces **96** could be defined on the shock tower **88**. As can be seen in FIG. **7**, when the frame **16** is in the upright position as shown, the stoppers **94** are vertically higher than the stoppers **80**.

A rack **98** is disposed between the plates **70** and **84** and is fastened to the front of the shock tower **88** as shown in FIG. **8**. As such, the rack **98** is fixed relative to the shock tower **88**. As can also be seen in FIG. **8**, the rack **98** has a central aperture **100** located at a lateral center of the rack **98** at a top thereof, and left and right forwardly facing ratchet surfaces **102** on either sides of the central aperture **100**. The central aperture **100** and the ratchet surfaces **102** generally define an arc having the pivot axis **92** as a center of curvature.

A locking mechanism **104** is mounted onto the front of the plate **84**. The locking mechanism **104** includes an electric motor **106**, a cylinder **108** and a pin **110** (FIG. **8**). The pin **110** is slidably received in the cylinder **108** and passes through an aperture (not shown) in the plate **84** in alignment with the central aperture **100** of the rack **98** when the frame **16** is in the upright position. The electric motor **106** slides the pin **110** rearwardly such that the pin **110** can be received in the central aperture **100** of the rack **98** when the frame **16** is in the upright position. When the pin **110** is received in the central aperture **100** of the rack **98**, the frame **16** is locked in the upright position and cannot pivot relative to the shock tower **88**. When the frame **16** is pivoted from the upright position relative to the shock tower **88** and the electric motor **106** slides the pin **110** rearwardly such that the pin **110** abuts one of the ratchet surfaces **102**, the interaction between the pin **110** and the ratchet surface **102** it abuts prevent the frame **16** from pivoting further away from the upright position, but permits the frame **16** from being pivoted back to the upright position such that the pin **110** can be received in the central aperture **100**, thereby locking the frame **16** in the upright position. For example, when the frame **16** is pivoted to the left with relative to the shock tower **88** as shown in FIGS. **9** and **10** and the electric motor **106** slides the pin **110** rearward to abut the left ratchet surface **102**, the frame **16** is prevented from pivoting further toward the left relative to the shock tower **88**, but can be pivoted toward the right relative to the shock tower **88** up to the upright position. When the electric motor **106** slides the pin **110** forwardly such that the pin **110** is not received in the central aperture **100** and does not abut a ratchet surface **102** of the rack **98**, the frame **16** is free to lean relative to the shock tower **88** until one of the stoppers **94** makes contact with its corresponding contact surface **96** as will be discussed in greater detail below. It is contemplated that the electric motor **106** could be replaced by another type of actuator, such as, but not limited to, a hydraulic actuator or a solenoid. It is also contemplated that the rack **98** could be connected to the rear side of the shock tower **88**, with the ratchet surfaces **102** facing rearward and the locking mechanism **104** mounted to a rear surface of the plate **70**.

It is contemplated that the electric motor **106**, and therefore the position of the pin **110**, can be controlled by a switch, buttons or any other input means to be actuated by the driver of the snowmobile **10**. As a result, the driver of the snowmobile **10** can decide to operate the snowmobile **10** as a leaning vehicle by unlocking the frame **16** from the shock tower **88** or to operate the snowmobile **10** as a more typical steer-in-direction snowmobile by locking the frame **16** relative to the shock tower **88**. It is also contemplated that the electric motor **106** could be controlled to automatically move the pin rearwardly when the snowmobile **10** is operated below a predetermined speed or stopped.

The right front suspension assembly **28** will now be described in more detail. The left front suspension assembly **28** is a mirror image of the right front suspension assembly **28** and will therefore not be described in detail herein. Elements of the left front suspension assembly **28** corresponding to

elements of the right front suspension assembly **28** have been labelled with the same reference numerals in the figures.

The right front suspension assembly **28** has upper and lower suspension arms **150**, **152**, a shock absorber **154** and a ski leg **156**.

The upper suspension arm **150** is made of two arms connected at their distal ends to form a generally V-shape. The proximal end of the rear arm of the upper suspension arm **150** is pivotally connected about an upper suspension arm pivot axis **158** in a recess formed in the extruded frame member **68**. The proximal end of the front arm of the upper suspension arm **150** is pivotally connected about the upper suspension arm pivot axis **158** to the front of plate **84** above the bracket **86**. The upper suspension arm pivot axis **158** is parallel to the pivot axis **92** and, as best seen in FIG. **4**, is slightly laterally offset from the pivot axis **92** when the frame **16** is in the upright position. A ball joint **160** is connected to the distal ends of the two arms of the upper suspension arms **150**. A fastener connects the ball joint **160** to an upper portion of the ski leg **156** such that the upper suspension arm **150** is pivotally connected to the ski leg **156**. More specifically, the ball joint **160** is connected to a rear wall of the ski leg **156**.

The lower suspension arm **152** is made of two arms and a cross-member **162** connected between these two arms. The two arms are connected at their distal ends by a connector **163** to form a generally V-shape. The proximal end of the rear arm of the lower suspension arm **152** is pivotally connected about a lower suspension arm pivot axis **164** in a recess formed in the extruded frame member **68**. The proximal end of the front arm of the lower suspension arm **152** is pivotally connected about the upper suspension arm pivot axis **164** between the front of the plate **84** and the tab of the bracket **86**. The lower suspension arm pivot axis **164** is parallel to the pivot axis **92** and, as best seen in FIG. **4**, is slightly laterally offset from the pivot axis **92** when the frame **16** is in the upright position. The cross-member **162** and its corresponding stopper **80** are arranged such that the cross-member provides a contact surface for the stopper **80** to abut under certain conditions as will be described in greater detail below. It is contemplated that the stopper **80** could be attached on the cross-member **162** and that a contact surface could be provided on the frame **16** at the position where the stopper **80** is shown in the figures. A ball joint **166** is connected to the connector **163** of the lower suspension arms **152** via a connector **168** (FIG. **4**). A fastener connects the ball joint **166** to a portion of the ski leg **156** that is vertically below and forward of the ball joint **160** such that the lower suspension arm **152** is pivotally connected to the ski leg **156**. More specifically, the ball joint **166** is connected to a front wall of the ski leg **156**. The connectors **163** and **168** each have a plurality of apertures used to fasten the two together. These apertures allow the longitudinal position of the connector **168** to be changed, which in turn changes the longitudinal position of the ball joint **166**. Changing the position of the ball joint **166** changes the caster angle of the ski leg **156**. The caster angle is the angle between vertical and a line **170** (FIG. **3**) passing through the center of both ball joints **160**, **166**. It is contemplated that the longitudinal position of the lower ball joint **166** could be modified in other ways. For example, the aperture in one or both of the connectors **163**, **168** could be replaced with slots. It is also contemplated that the longitudinal position of the upper ball joint **160** could be adjustable instead of or in addition to the adjustability of the lower ball joint **166**.

The shock absorber **154** includes a hydraulic damper around which is disposed a coil spring. The lower end of the shock absorber **154** is pivotally connected to a bracket integrally formed on the connector **163** of the lower suspension arm **152**. The upper end of the shock absorber **154** is pivotally connected to the corresponding distal end of the shock tower **88**. As can be seen in FIG. **7** for the left end, a space is formed between the front and rear walls of the shock tower **88** at its distal end to receive the upper end of the shock absorber **154**. As can be seen, the lower end of the shock absorber **154** is located laterally outwardly of its upper end.

The right ski **26** and its connection to the right ski leg **156** will now be described in more detail. The left ski **26** and its connection to the left ski leg **156** are a mirror image of the right ski **26** and its connection to the right ski leg **156** and will therefore not be described in detail herein. Elements of the left ski **26** and its connection to the left ski leg **156** corresponding to elements of the right ski **26** and its connection to the right ski leg **156** have been labelled with the same reference numerals in the figures.

The ski **26** has an upturned front portion, a keel **172** laterally centered on the bottom of the ski **26**, two ribs **174** extending longitudinally on the top of the ski **26**, and a handle **176** connected to the upturned portion between the ribs **174**. It is contemplated that other types of snowmobile skis could be used.

The ski **26** is pivotally connected about a pivot axis **177** (FIG. **3**) to a first ski connector **178** (FIG. **9**) by a fastener. As can be seen, the first ski connector is received between the ribs **174** and is fastened to the ski **26** near the longitudinal center of the ski **26**. As can be seen in FIG. **9**, the first ski connector **178** has two longitudinal slots **180**. A second ski connector **182** is disposed over the first ski connector **178** and is connected to it by fasteners passing through the slots **180**. The second ski connector **182** has an L-shaped portion adapted to abut the bottom and outer surfaces of the ski leg **156**. The second ski connector **182** has a number of apertures **184** that permit connection to the ski leg **156** at a number of different positions. The apertures **184** and slots **182** allow the ski **26** to be selectively moved relative to the ski leg **156** along the longitudinal axis of the ski **26**. The apertures **184** permit "macro" adjustment, while the slots **182** permit a more precise "micro" adjustment of the position of the ski **26** relative to the ski leg **156**. It is contemplated that the apertures **184** could be replaced by slots. It is also contemplated that the slots **180** could be replaced by apertures. It is also contemplated that the first and second ski connectors **178**, **182** could be replaced by a single ski connector having slots or apertures. It is also contemplated that other adjustment mechanisms could be provided. For example, the slots or multiple apertures could be provided on the ski leg **156**. It is contemplated that in some embodiment, the position of the ski **26** relative to the ski leg **156** could be fixed.

By changing the position of the ski **26** relative to the ski leg **156** along the longitudinal axis of the ski **26**, the trail length L (FIG. **3**) of the ski **26** is changed. The trail length L is the distance between the point of intersection of a vertical line **186** passing through the pivot axis **177** with the ground (line **188**, FIG. **3**) and the point of intersection of the caster line **170** with the ground **188**. Changing the caster angle also changes the trail length L. The caster angle controls the degree of self-centering of the ski **26**. The trail length L affects the handling characteristics of the snowmobile **10** (i.e. how stable the steering feels to the driver). Caster and trail length determine in part the amount of force necessary to steer the skis **26** and the straight line stability of the skis **26**. As explained above, the snowmobile **10** can be driven as a leaning vehicle by allowing the frame **16** to pivot relative to the shock tower **88** or can be driven as a steer-in-direction vehicle by locking the frame **16** to the shock tower **88**. As these are two very different driving conditions, the desired steering forces are

not the same for both conditions. As such, by allowing both the caster angle and trail length to be adjusted, the steering forces required and the straight line stability of the skis **26** can be adjusted to best suit the selected driving condition (i.e. leaning or steer-in-direction).

To steer the skis **26**, each ski leg **156** is connected to a steering rod **189** (not shown in this embodiment, but they are the same as the ones shown in the alternative embodiment of FIGS. **13** and **14**) via a ball joint **190** (FIGS. **5** and **6**) connected to the back of the ski leg **156**. The proximal ends of the steering rods **189** are connected to a pitman arm **192** (FIGS. **5** and **6**) connected to the lower portion of a steering column **194**. The steering column **194** is connected to the frame **16** by lower and upper brackets **196**, **198** inside which it can pivot. The upper bracket **198** is connected to the cross member **71**. The steering column **194** is disposed forward of the cross bar **67**. A pair of connecting rods **200** having ball joints at both ends is connected between a flange **202** (FIG. **4**) at a top of the steering column **194** forward of the generally triangular surface area defined by the cross bar **67** and left and right frame members **69** and a flange **204** (FIGS. **5** and **6**) near a bottom of the steering column **30** rearward of the generally triangular surface area defined by the cross bar **67** and left and right frame members **69**, thereby transmitting steering motion between the steering columns **30** and **194**. As can be seen in FIG. **9**, the connecting rods **200** extend through the generally triangular surface area defined by the cross bar **67** and left and right frame members **69**. The steering column **30** is connected to the frame **16** by lower and upper brackets **206**, **208** inside which it can pivot. As can be seen in FIG. **5**, the bracket **208** is connected to the upper ends of the frame members **69**. The lower end of the steering column **30** is disposed rearward of the generally triangular surface area defined by the cross bar **67** and left and right frame members **69**. It is contemplated that the steering column **30** could be disposed more forwardly than illustrated so as to extend through the generally triangular surface area defined by the cross bar **67** and left and right frame members **69**. As a result of this arrangement, when the handlebar **32**, which is connected to the steering column **30**, is turned in one direction, the skis **26** are turned in the same direction. It is contemplated that the steering columns **30** and **194** could be replaced by a single steering column or by more than two steering columns. It is also contemplated that the snowmobile **10** could be provided with a power steering system where an actuator, such as an electric motor or a hydraulic actuator, moves the steering rods **189** to steer the skis **26**.

When the frame **16** is locked to the shock tower **88**, the snowmobile **10** is steered by turning the handlebar **32** in the direction in which the driver wants to turn. When the frame **16** is not locked to the shock tower **88**, the snowmobile **10** is steered by leaning the frame **16** relative to the shock tower **88** in the direction of the turn. To do this, the driver has to countersteer by momentarily turning the handlebar **32** in the direction opposite to the turn thereby causing a moment that leans the frame **16** into the turn. As explained above, the frame **16** pivots about the pivot axis **92**. As can be seen in FIGS. **9** and **10**, as the frame **16** pivots about the pivot axis **92**, the shock tower **88** remains substantially vertical.

The stoppers **80** and **94** prevent the frame **16** from being pivoted too much about the pivot axis **92**. An example of the use of the left stoppers **80** and **94** will now be provided for the snowmobile **10** making a left turn as shown in FIGS. **9** and **10**. It should be understood that for the snowmobile **10** making a right turn, the same thing occurs but with the right stoppers **80** and **94** and their corresponding contact surfaces on the right side of the snowmobile **10**.

As the frame **16** is increasingly pivoted about the pivot axis **92** toward the left relative to the shock tower **88** to make a left turn, the frame **16** eventually reaches an angle where the left contact surface **96** of the triangular member **76** makes contact with the left stopper **94** mounted on the shock tower **88**. In an exemplary embodiment, this angle is between 45 and 60 degrees. Between the upright position (i.e. no leaning) and the angle where the stopper **94** makes contact with the contact surface **96**, the shock tower **88** remains substantially upright and the shock absorbers **154** are not compressed as a result of the leaning of the frame **16**. When the left stopper **94** makes contact with the contact surface **96**, the force of the impact is absorbed in part by the left shock absorber **154**, thus reducing the transmission of vibrations resulting from the impact from being transferred to the other components of the snowmobile **10** and to the driver and, if applicable, his passenger.

Once the left stopper **94** makes contact with the left contact surface **96**, the frame **16** can continue to be pivoted toward the left, but in order to do this, the left shock absorber has to be compressed. This can be done as a result of the angular momentum resulting from the initial leaning of the frame **16** relative to the shock tower **88** when the left stopper **94** made contact with the left contact surface **96** and/or by the driver shifting his weight to cause further pivoting of the frame **16**. When the frame **16** is leaned after the left stopper **94** has made contact with the left contact surface **96**, not only is the frame **16** pivoted but the shock tower **88** and the other components of the snowmobile **10** are also pivoted with it. As the left shock absorber **154** is compressed to provide further leaning of the snowmobile **10**, the left stopper **80** moves toward the cross-member **162** of the lower left suspension arm **152** until it makes contact with it, thereby preventing any further leaning of the snowmobile **10** relative to the vertical. In an exemplary embodiment, the amount by which the left shock absorber **154** is compressed when the left stopper **80** contacts the left cross-member **162** corresponds to 10 to 20 degrees of further leaning of the snowmobile **10** from the angle where the left stopper **94** made contact with the left contact surface **96**.

The stoppers **80** and **94** on the right side of the snowmobile **10** limit leaning toward the right by the same angles as the stoppers **80** and **94** on left side of the snowmobile **10** limit leaning toward the left.

It is contemplated that the stoppers **80**, **94** could be useful in limiting leaning on an assisted leaning system as providing the stoppers **80**, **94** would reduce strain on the leaning actuator which is often used to limit the leaning.

Turning now to FIGS. **11** and **12**, the drive track **34** will be described in more detail. To facilitate leaning of the frame **16**, the track **34** is provided with an arcuate lateral profile as can be seen in FIG. **12**. The radius of curvature R1 of the track **34** and the radius of curvature R2 of an arc **210** (FIG. **8**) passing through the lateral edges of the ground contacting surfaces of a ski **26** are selected to be approximately equal to each other or equal to each other. If the radius R1 is greater than the radius R2, the rear of the snowmobile **10** will be pushed up as the frame **16** (and track **34**) leans, thereby removing some pressure from the skis **26**. However, this can be at least partially counteracted by changing the lateral distance between the lower suspension arm pivot axes **164**.

The drive track **34** has central terrain lugs **40**A alternating with pairs of outer terrain lugs **40**B along the length of the track **34**. As can be seen in FIG. **12**, the central terrain lugs **40**A have a flat central portion with rounded corners of radius R1 and the outer terrain lugs **40**B have a rounded edge of radius R1. Between each central terrain lug **40**A and pair of outer terrain lugs **40**B is connected an arcuate boss **212** of

radius R1. Each boss **212** is connected by a pair of fasteners **214** to the belt **216** forming the body of the track **34**. As can be seen in FIG. **12**, the fasteners **214** protrude from the boss **212** to form cleats, thereby providing additional traction. The bosses **212** are made of plastic, but it is contemplated that they could be made of other materials such as rubber, in which case they could be integrally formed with the belt **216**. The pattern of lugs **40**A, **40**B is only one possible pattern of terrain lugs **40** and other patterns are contemplated. It is also contemplated that the drive track **34** could have generally horizontal lugs **40**. In such an embodiment, it is contemplated that the rear suspension **38** could tilt about a longitudinal axis.

Turning now to FIGS. **13** to **18**, a snowmobile **10'**, which is an alternative embodiment of the snowmobile **10**, will be described. The snowmobile **10'** is the same as the snowmobile **10** except that an inertia wheel **250** and its associated components have been added to it and the exhaust system has been slightly modified as described below to accommodate the inertia wheel and its associated components. Elements of the snowmobile **10'** that are the same as those of the snowmobile **10** described above have been labelled with the same reference numerals in the figures and will not be described again. Also, some of the components of the snowmobile **10**, such as the endless drive track **34**, the rear suspension assembly **38**, the seat **60** and the locking mechanism **104**, to name a few, have been omitted from FIGS. **13** to **18**. It should be understood that the components omitted from these figures are nonetheless present in the snowmobile **10'**.

In order to accommodate the inertia wheel **250** and its associated components, the muffler **66** of the snowmobile **10** has been replaced with a smaller muffler **252** disposed on a right side of the engine cradle **20**. The muffler **252** is disposed forward of and below the center of the inertia wheel **250**. The muffler **252** is connected to the tuned pipe **64** by an exhaust pipe **254**. The muffler **252** exhausts exhaust gases under the engine cradle **20**.

As can be seen in FIG. **14**, the belt transmission system **36** includes a driving pulley **256**. The driving pulley **256** is mounted on an output shaft (not shown) of the engine **24**. In the present embodiment, the output shaft is coaxial with the crankshaft (not shown) of the engine **24**, but it is contemplated that they could be offset from each other. The driving pulley **256** drives a driven pulley **257** (shown in the embodiment of FIG. **19**) via a belt **259** (shown in the embodiment of FIG. **19**)). The driven pulley and the belt also form part of the belt transmission system **36**. The driven pulley is mounted on an end of a laterally extending countershaft **258**. The countershaft **258** is disposed rearward of the skis **26**. An upper sprocket **260** (FIG. **15**) of the reduction drive **25** is mounted on the other end of the countershaft **258**. The sprocket **260** drives a lower sprocket (not shown) via a chain (not shown). The upper sprocket **260**, lower sprocket and chain are disposed inside a housing of the reduction drive **25**. The lower sprocket is mounted on another shaft (not shown) that drives the drive sprockets that drive the endless drive track. The endless drive track **34** of the snowmobile **10** is driven in the same manner.

The inertia wheel **250** is fastened to a hub **262**. The hub **262** is mounted on an axle **264**. The axle **264** is rotationally supported inside a gimbal **266** by one or more bearings (not shown). As can be seen in FIGS. **15** and **16**, the gimbal **266** is connected between a pair of bearings **268**. The upper bearing **268** is connected to a generally L-shaped gimbal support bracket **270**. The bracket **270** is connected to a bracket **272** that is connected to a portion of the frame **16**. Alternatively, the bracket **270** could be connected to a component of the snowmobile **10'** other than the frame **16**. It is also contemplated that the bracket **272** could be omitted and that the bracket **270** could be connected directly to the frame **16** or a component of the snowmobile **10'** other than the frame **16**. The lower bearing **268** is connected to a generally L-shaped gimbal support bracket **274**. The bracket **274** is connected to a plate **276** of the frame **16**. It is contemplated that bracket **274** could be connected to another portion of the frame **16** or to a component of the snowmobile **10'** other than the frame **16**. It is also contemplated that the bracket **274** could be connected to another bracket that connects it to its connection point on the snowmobile **10'**.

As such, the bearings **268** pivotally support the gimbal **266** about a vertical axis **278**. It is contemplated that the axis **278** could be slightly offset from vertical by up to 20 degrees. The gimbal **266** and the inertia wheel **250** pivot together about the axis **278**. As can be seen in FIGS. **13** and **14**, the gimbal **266** is positioned such that the vertical axis **278** is disposed rearward of the skis **26**. In the lateral direction, the vertical axis **278** is disposed between the longitudinal centerline of the snowmobile **10'** and the central longitudinal axis **280** (FIG. **14**) of the right ski **26** when the snowmobile **10'** is steered in a straight ahead direction as in FIG. **14**. The axle **264** offsets the inertia wheel **250** from the vertical axis **278**. As a result, the inertia wheel **250** is disposed laterally outward of the tunnel **18** and the right footrest **62**. As can be seen in FIG. **13**, the center of the inertia wheel **250** is located vertically higher than the pivot axis **92** when the snowmobile **10'** is upright and steered in a straight ahead direction.

As best seen in FIGS. **15** and **16**, a joint **282** is housed partially inside the gimbal **166**. The joint **282** is rotationally supported by the gimbal **266** and connects to the axle **264** inside the gimbal **266**. In the present embodiment, the joint **282** is a constant velocity joint. However it is contemplated that the joint **282** could be any type of joint that can transmit torque between two shafts that are arranged at an angle to each other. The joint **282** is positioned such that the vertical axis **278** passes through the point about which the joint **282** is articulated such that the inertia wheel **250**, the axle **264**, the gimbal **266** and a portion of the joint **282** can pivot together about the vertical axis **278**. An inertia wheel shaft **284** is connected between the joint **282** and the countershaft **258**. As can be seen in FIG. **15**, the inertia wheel shaft **284** is disposed laterally between the joint **282** and the sprocket **260**. One end of the inertia wheel shaft **284** is received inside the joint **282** and the other end is fastened by a nut **286** over the end of the countershaft **258**. A cotter pin **288** prevents the nut **286** from becoming loose during operation. The countershaft **258** drives the inertia wheel **250** via the inertia wheel shaft **284**, the joint **282**, the axle **264** and the hub **262**. The joint **282** permits torque to be transferred from the countershaft **258** to the inertia wheel **250** even when the gimbal **266** pivots about the vertical axis **278**. Therefore, when the engine **24** is in operation, the inertia wheel **250** rotates about an inertia wheel axis **290** (FIG. **15**). The inertia wheel **250** and the endless drive track **34** both rotate in the same direction (i.e. clockwise with reference to FIG. **13** when the snowmobile **10'** is operated to move forward). The inertia wheel axis **290** and the countershaft axis **292** are coaxial when the snowmobile **10'** is steered in a straight ahead direction as shown in FIG. **15**.

A bracket **294** is connected to the gimbal **266** rearward of the vertical pivot axis **278**. The bracket **294** extends vertically higher than the inertia wheel **250** and the gimbal **266**. A link **296** is pivotally connected at one end about a point on the top of the bracket **294**. The other end of the link **296** is pivotally connected about a point on a pitman arm **298** connected to and extending rearward from the steering column **30**. Therefore, when the handlebar **32** is turned to steer the skis **26** as

described above, the gimbal **266** and the inertia wheel **250** pivot in the same direction. For example, as can be seen in FIGS. **17** and **18**, when the handlebar **32** is turned to steer the skis **26** toward the right (i.e. turn clockwise as viewed from above), the gimbal **266** and inertia wheel **250** also pivot toward the right about the axis **278** (i.e. turn clockwise as view from above).

In an alternative embodiment, the bracket **294** is connected to the gimbal **266** forward of the vertical axis **278** and the pitman arm **298** extends forward from the steering column **30** with the link **296** connected therebetween. It is contemplated that the bracket **294** could be omitted to connect the link **296** directly to the gimbal **266** at one end and to a pitman arm **298** disposed lower on the steering column **30** at the other should there be no components of the snowmobile **10'** to interfere with the link **296** between the steering column **30** and the gimbal **266**. It is contemplated that other mechanisms could be used to pivot the gimbal **266** and the inertia wheel **250** about the axis **278** in response to steering of the handlebar **32**. Examples of such mechanisms include, but are not limited to, arrangements of gears, belt and pulleys, and rack and pinion. It is also contemplated that a sensor could be provided to sense rotation of the steering column **30** (or the steering column **194**) and that an electrical or hydraulic actuator could pivot the gimbal **266** in response to a signal from the sensor.

As with the snowmobile **10**, when the frame **16** is not locked to the shock tower **88**, the snowmobile **10'** is steered by leaning the frame **16** relative to the shock tower **88** in the direction of the turn. To do this, the driver countersteers by momentarily turning the handlebar **32** in the direction opposite to the turn thereby causing a moment that leans the frame **16** into the turns. In the snowmobile **10'**, countersteering also causes the inertia wheel **250** to turn about the vertical axis **278**. As a result, the inertia wheel **250** creates a moment (moment M in FIG. **17** for leaning into a left turn) about an axis perpendicular to a plane defined by the vertical axis **278** and the inertia wheel axis **290**. This moment has a component that creates a moment that assists in leaning the frame **16** into the turn. FIGS. **17** and **18** illustrate countersteering of the snowmobile **10'** to take a left turn. As can be seen, the handlebar **32** is steered toward the right of the snowmobile **10'**, which turns the skis **26** and the inertia wheel **250** toward the right of the snowmobile **10'** as shown. The inertia wheel **250** generates a moment M that has a clockwise component (with reference to FIG. **17**) that assists in leaning the frame **16** toward the left of the snowmobile **10'**, thus making the snowmobile **10'** turn left. Similarly, by steering the skis **26** in the other direction, the inertia wheel **250** generates a moment in the other direction that has a component that assists in returning the frame **16** to the upright position.

Also, should the frame **16** suddenly lean relative to the shock tower **88**, but not as a result of the driver countersteering the snowmobile **10'** as described above, the inertia wheel **250** creates a torque on the steering column **30** that turns the handlebar **32** toward the direction of the lean to steer the skis **26** toward the direction of the lean (i.e. toward the right of the snowmobile **10'** for the frame **16** leaning right and toward the left of the snowmobile **10'** for the frame **16** leaning left) in reaction to which the skis **26** will move in the direction of the lean to displace the snowmobile's contact with the ground in the direction of the lean until it is once again in lateral alignment with the center of gravity of the snowmobile **10'** thereby recreating stability. In the case of a loss of lateral traction between the snowmobile **10'** and the ground causing the frame **16** to lean, applying a torque to the handlebar **32** in the direction of the lean causes the inertia wheel **250** to create about the center of gravity of the snowmobile **10'** that, depending on the magnitude of the torque and the mass of the inertia wheel **250**, reduces the leaning of the frame **16**, uprights the frame **16**, or stops the frame **16** from leaning further.

Turning now to FIGS. **19** and **20**, a snowmobile **10"**, which is an alternative embodiment of the snowmobiles **10** and **10'**, will be described. The snowmobile **10"** has a frame **16"**. The frame **16"** has a tunnel **18**, an engine cradle portion **20** and a front suspension assembly portion **22** that, although not identical, are similar to those described above, and as such will not be described again. The frame **16"** also has an extension portion **300** connected longitudinally between the engine cradle portion **20** and the front suspension portion **22**. The steering assembly of the snowmobile **10"** differs from the steering assembly of the snowmobiles **10** and **10'** described above and will be described in detail below. The snowmobile **10"** is also provided with an inertia wheel **302** and its associated components which will be described in detail below. The other components of the snowmobile **10"**, although not necessarily identical, are similar to those of the snowmobiles **10** and **10'** described above. Therefore, the components of the snowmobile **10"** that are similar to those of the snowmobiles **10** and **10'** have been labeled with the same reference numerals in the figures and will not be described again in detail herein.

The steering assembly of the snowmobile **10"** has three steering columns **30**, **304** and **306**. A handlebar (not shown in this embodiment, but similar to the handlebar **32**) is connected to the top of the steering column **30**. To steer the skis **26**, each ski leg **156** is connected to a steering rod **189** via a ball joint **190** connected to the back of the ski leg **156**. The proximal ends of the steering rods **189** are connected to a pitman arms **308** (FIG. **20**) connected to the lower portion of the steering column **304**. The steering column **304** is connected to the frame **16"** in front of the shock absorbers **154** by lower and upper brackets (not shown) inside which it can pivot. As best seen in FIG. **20**, a pair of connecting rods **310** having ball joints at both ends is connected between a flange **312** at a top of the steering column **304** and a flange **314** near a bottom of the steering column **306**, thereby transmitting steering motion between the steering columns **306** and **304**. The steering column **306** is connected to the frame **16"** rearward of the steering column **304** by lower and upper brackets (not shown) inside which it can pivot. The steering column **306** extends through the generally triangular surface area defined by the cross bar **67** and left and right frame members **69**. As can be seen in FIG. **19**, a pair of connecting rods **316** having ball joints at both ends is connected between a flange **318** above a center of the steering column **306** and a flange (not shown, but similar to the flange **204** described above) near a bottom of the steering column **30**, thereby transmitting steering motion between the steering columns **30** and **306**. The steering column **30** is connected to the frame **16"** rearward of the steering column **306** by lower and upper brackets (not shown) inside which it can pivot. As a result of this arrangement, when the handlebar, which is connected to the steering column **30**, is turned in one direction, the skis **26** are turned in the same direction. It is contemplated that the steering columns **30**, **304** and **306** could be replaced by a single steering column, two steering columns or more than three steering columns. It is also contemplated that the snowmobile **10"** could be provided with a power steering system where an actuator, such as an electric motor or a hydraulic actuator, moves the steering rods **189** to steer the skis **26**.

The inertia wheel **302** is rotationally supported inside a gimbal **320**. As can be seen in FIG. **20**, the inertia wheel **302** has a radius R and a thickness T. In an exemplary embodi-

ment, the radius R is between 10 and 17.5 cm and the thickness T is between 4 and 10 mm. In an exemplary embodiment, the inertia wheel **302** is made of metal such as steel and has a mass between 1 and 7 kg. In order to create a large gyroscopic effect, the radius R of the inertia wheel **302** is selected to be as large as possible within the other physical constraints of the snowmobile **10"** while having a thickness T and using a material that keep the mass M to a minimum. An electric motor **322** is mounted to a left side of the gimbal **320**. A shaft (not shown) passes through a center of the inertia wheel **302** and connects to the output shaft (not shown) of the electric motor **322**. The shaft and the inertia wheel **302** are connected together, by splines for example, so as to be rotationally fixed relative to each other. The electric motor **322**, when powered, causes the inertia wheel **302** to turn inside the gimbal about an inertia wheel axis **324**. The shaft passing through the center of the inertia wheel **302** is supported by bearings (not shown) in the gimbal **320**. In the present embodiment, the shaft passing through the center of the inertia wheel **302** is coaxial with the output shaft of the electric motor **322**. It is contemplated that the output shaft of the electric motor **322** could be offset from the shaft of the inertia wheel **302** and that a transmission system, such as gears, a chain and sprocket assembly, or a belt and pulleys assembly, could be used to transmit rotation of the output shaft of the electric motor **322** to the shaft of the inertia wheel **302**.

As with the gimbal **266** described above, the gimbal **320** is connected between a pair of bearings (not shown) connected to lower and upper brackets **325**, **327** (FIG. **19**). The brackets **325**, **327** are connected to a portion of the frame **16"**. Alternatively, the brackets **325**, **327** could be connected to a component of the snowmobile **10"** other than the frame **16"**. As such, the bearings pivotally support the gimbal **320** about a vertical axis **326** (FIG. **20**). It is contemplated that the axis **326** could be slightly offset from vertical by up to 20 degrees. The gimbal **320**, the inertia wheel **302** and the electric motor **322** pivot together about the axis **326**. As can be seen in FIG. **19**, the gimbal **320** is positioned in the extension portion **300** of the frame **16"** such that the inertia wheel **302** is disposed rearward of the front suspension assemblies **28** and forward of the engine **24** and the CVT **36**. The vertical axis **326** is laterally centered in the snowmobile **10"** and, as a result, intersects the longitudinal centerline of the snowmobile **10"**. The vertical axis **326** is disposed in a vertical plane containing the longitudinal centerline of the snowmobile **10"** when the snowmobile **10"** is upright and steered in a straight ahead direction. The rotation axes **328** and **330** of the steering columns **304** and **306** respectively are also contained in a plane containing the vertical axis **326** and the longitudinal centerline of the snowmobile **10"**. It is contemplated that the vertical axis **326** could be laterally offset from the longitudinal centerline of the snowmobile **10"**. The vertical axis **326** is perpendicular to the axis of rotation **332** of the driving pulley **256**, the axis of rotation of the crankshaft (not shown but coaxial with the axis **332**) and the axis of rotation **334** of the driven pulley **257**. As can be seen in FIG. **19**, the center of the inertia wheel **302** is located vertically higher than the pivot axis **92** when the snowmobile **10"** is upright and steered in a straight ahead direction. When the snowmobile **10"** is steered in a straight ahead direction, the inertia wheel axis **324** is parallel to the axis of rotation **332** of the driving pulley **256**, the axis of rotation of the crankshaft and the axis of rotation **334** of the driven pulley **257**. The center of the inertia wheel **302** is located vertically lower than the axis of rotation **332** of the driving pulley **256** and the axis of rotation **334** of the driven pulley **257**. The center of the inertia wheel **302** is located vertically between the pivot axis **92** and a line **336** that is parallel to the pivot axis **92** and passes through the axis of rotation **332** of the driving pulley **256**. The center of the inertia wheel **302** is therefore also located vertically between the pivot axis **92** and a line **338** that is parallel to the pivot axis **92** and passes through the axis of rotation **334** of the driven pulley **257**. FIG. **19** shown the location of the center of gravity CG of the snowmobile **10"** when the snowmobile **10"** is upright, steered in a straight ahead direction and full of operational fluids (i.e. a fuel tank full of fuel, and oil tank full of oil, etc.). As can be seen in FIG. **19**, the center of gravity CG and the center of the inertia wheel **302** are at approximately the same height. In an exemplary embodiment, the vertical distance between the center of gravity CG and the center of the inertia wheel **302** is less than or equal to the radius R of the inertia wheel **302**.

As described above, the electric motor **322** is mounted to the gimbal **320** and as such rotates about the pivot axis **326** with the gimbal **320** and the inertia wheel **302**. It is contemplated that the electric motor **322** could be mounted to another portion of the snowmobile **10"** so as to not rotate about the pivot axis **326**. In such an embodiment, one or more joints that can transmit torque between two shafts that are arranged at an angle to each other and, if necessary, one or more shafts could be used to connect the output shaft of the electric motor **322** to the shaft of the inertia wheel **302**. When the engine **24** is in operation, the inertia wheel **302** rotates about the inertia wheel axis **324**. When the snowmobile **10"** is in operation, the electric motor **322** rotates the inertia wheel **302** in the same direction as the endless drive track **34** (i.e. counter-clockwise with reference to FIG. **19** when the snowmobile **10'** is operated to move forward). The speed of rotation of the electric motor **322** and therefore of the inertia wheel **302** is controlled by a control unit (not shown). The control unit receives a signal from a speed sensor sensing a speed of the snowmobile **10"**. The speed of rotation of the inertia wheel **302** is controlled so as to increase as the speed of the snowmobile **10"** decreases. As such, when the snowmobile **10"** is operated at low speeds, the speed of rotation of the inertia wheel **302** is greater than when the snowmobile **10"** is operated at high speeds. The control unit also causes the electric motor **322** to stop operating, and therefore stops the rotation of the inertia wheel **302**, when the locking mechanism **104** locks the frame **16"** in the upright position and also when the engine **24** stops operating. It is contemplated that the inertia wheel **302** could be rotated at a constant speed regardless of the speed of the snowmobile **10"**. It is also contemplated that other factors, such as acceleration of the snowmobile **10"** and engine speed for example, could be used to determine a speed of rotation of the inertia wheel **302**.

A shaft **340** is fixed to the top of the gimbal **320**. A link **342** is fixedly connected to the top of the shaft **340** and extends toward the left from the shaft **340**. Another link **344** is fixedly connected to the flange **314** and extends toward the left from the flange **314**. A connecting rod **346** having ball joints **348** at both ends connects the left end of the link **342** to the left end of the link **344**. Therefore, when the handlebar is turned to steer the skis **26** as described above, the gimbal **320**, the electric motor **322** and the inertia wheel **302** pivot in the same direction. For example, when the handlebar is turned to steer the skis **26** toward the right (i.e. turn clockwise as viewed from above), the gimbal **320**, the electric motor **322** and the inertia wheel **302** also pivot toward the right about the axis **326** (i.e. turn clockwise as view from above).

It is contemplated that the links **342**, **344** and the connecting rod **346** could alternatively be disposed on a right side of the axis **326**. It is also contemplated that other mechanisms could be used to pivot the gimbal **320**, the electric motor **322**

and the inertia wheel **302** about the axis **326** in response to steering of the handlebar. Examples of such mechanisms include, but are not limited to, arrangements of gears, belt and pulleys, and rack and pinion. It is also contemplated that a sensor could be provided to sense rotation of the steering column **30** (or the steering column **304** or **306**) and that an electrical or hydraulic actuator could pivot the gimbal **320** in response to a signal from the sensor.

Modifications and improvements to the above-described embodiments of the present may become apparent to those skilled in the art. The foregoing description is intended to be exemplary rather than limiting. The scope of the present is therefore intended to be limited solely by the scope of the appended claims.

What is claimed is:

1. A vehicle comprising:

a frame having a front portion and a rear portion;

a straddle seat mounted on the frame;

a motor supported by the frame;

a belt transmission system operatively connected to and driven by the motor;

a front left suspension assembly and a front right suspension assembly operatively connected to the front portion of the frame;

a front left ground engaging member operatively connected to the front left suspension assembly;

a front right ground engaging member operatively connected to the front right suspension assembly;

a rear suspension assembly connected to the rear portion of the frame;

a rear ground engaging member operatively connected to the rear suspension assembly,

at least one of the ground engaging members being driven by the belt transmission system;

a steering assembly operatively connected to the front left ground engaging member and the front right ground engaging member to steer the vehicle, the steering assembly having a steering column supported by the frame and a handlebar connected to the steering column; and

an inertia wheel operatively connected to the steering assembly, the inertia wheel pivoting about a generally vertical axis when the handlebar is turned to steer the front left and right ground engaging members, the inertia wheel pivoting about the vertical axis in a same direction as the front left and right ground engaging members when steered by the handlebar.

2. The vehicle of claim **1**, further comprising a link operatively connecting the steering column to the inertia wheel.

3. The vehicle of claim **2**, wherein the link is operatively connected at a first end to the steering column about a first point that is offset from a steering column axis defined by the steering column; and

wherein the link is operatively connected at a second end to the inertia wheel about a second point that is offset from the vertical axis.

4. The vehicle of claim **2**, wherein the link has a first end and a second end, the first end of the link being operatively connected to the steering column about a first point that is offset from a steering column axis defined by the steering column, and the second end of the link being operatively connected to the inertia wheel about a second point that is offset from the vertical axis;

the vehicle further comprising:

a joint operatively connected to the belt transmission system;

an axle connecting the joint to the inertia wheel; and a gimbal rotationally supporting the axle and the joint therein, the gimbal being pivotable about the vertical axis together with the inertia wheel, the gimbal being connected to the second end of the link.

5. The vehicle of claim **1**, wherein the inertia wheel and the rear ground engaging member rotate in a same direction when the vehicle is in operation.

6. The vehicle of claim **1**, wherein the frame is pivotable about a longitudinally extending pivot axis; and

wherein a center of the inertia wheel is vertically higher than the pivot axis at least when the vehicle is in an upright position.

7. The vehicle of claim **1**, further comprising a shock tower pivotally connected to the front portion of the frame, the frame being pivotable relative to the shock tower about a pivot axis between an upright position and a plurality of leaning positions;

wherein each of the front left suspension assembly and the front right suspension assembly includes a shock absorber connected at one end to the shock tower.

8. The vehicle of claim **1**, further comprising:

a laterally extending countershaft operatively connected to and driven by the belt transmission system; and

a reduction drive operatively connected to and driven by the countershaft;

wherein the inertia wheel rotates about an inertia wheel axis and the countershaft rotates about a countershaft axis; and

wherein the inertia wheel axis and the countershaft axis are coaxial when the vehicle is steered in a straight ahead direction.

9. The vehicle of claim **1**, wherein the vertical axis is disposed in a vertical plane containing a longitudinal centerline of the vehicle when the vehicle is steered in a straight ahead direction.

10. The vehicle of claim **1**, wherein the vehicle is a snowmobile; and

wherein:

the rear portion of the frame includes a tunnel;

the front left ground engaging member is a left ski;

the front right ground engaging member is a right ski; and

the rear ground engaging member is an endless track disposed at least in part under the tunnel.

11. The vehicle of claim **10**, wherein the endless drive track has a generally arcuate lateral profile.

12. The vehicle of claim **1**, further comprising an electric motor operatively connected to the inertia wheel and driving the inertia wheel.

13. The vehicle of claim **1**, wherein the inertial wheel is operatively connected to and driven by the belt transmission system.

14. A vehicle comprising:

a frame having a front portion and a rear portion;

a straddle seat mounted on the frame;

a motor supported by the frame;

a belt transmission system operatively connected to and driven by the motor;

a front left suspension assembly and a front right suspension assembly operatively connected to the front portion of the frame;

a front left ground engaging member operatively connected to the front left suspension assembly;

a front right ground engaging member operatively connected to the front right suspension assembly;

a rear suspension assembly connected to the rear portion of the frame;

a rear ground engaging member operatively connected to the rear suspension assembly,

at least one of the ground engaging members being driven by the belt transmission system;

a steering assembly operatively connected to the front left ground engaging member and the front right ground engaging member to steer the vehicle, the steering assembly having a steering column supported by the frame and a handlebar connected to the steering column; and

an inertia wheel operatively connected to the steering assembly, the inertia wheel pivoting about an inertia wheel pivot axis when the handlebar is turned to steer the front left and right ground engaging members, the inertia wheel pivoting about the inertia wheel pivot axis in a same direction as the front left and right ground engaging members when steered by the handlebar.

15. The vehicle of claim **14**, further comprising a link operatively connecting the steering column to the inertia wheel.

16. The vehicle of claim **15**, wherein the link is operatively connected at a first end to the steering column about a first point that is offset from a steering column axis defined by the steering column; and

wherein the link is operatively connected at a second end to the inertia wheel about a second point that is offset from the inertia wheel pivot axis.

17. The vehicle of claim **15**, wherein the link has a first end and a second end, the first end of the link being operatively connected to the steering column about a first point that is offset from a steering column axis defined by the steering column, and the second end of the link being operatively connected to the inertia wheel about a second point that is offset from the inertia wheel pivot axis;

the vehicle further comprising:

a joint operatively connected to the belt transmission system;

an axle connecting the joint to the inertia wheel; and

a gimbal rotationally supporting the axle and the joint therein, the gimbal being pivotable about the inertia wheel pivot axis together with the inertia wheel, the gimbal being connected to the second end of the link.

18. The vehicle of claim **14**, wherein the inertia wheel and the rear ground engaging member rotate in a same direction when the vehicle is in operation.

19. The vehicle of claim **14**, wherein the frame is pivotable about a longitudinally extending pivot axis; and

wherein a center of the inertia wheel is vertically higher than the longitudinally extending pivot axis at least when the vehicle is in an upright position.

20. The vehicle of claim **14**, further comprising a shock tower pivotally connected to the front portion of the frame, the frame being pivotable relative to the shock tower about a pivot axis between an upright position and a plurality of leaning positions;

wherein each of the front left suspension assembly and the front right suspension assembly includes a shock absorber connected at one end to the shock tower.

* * * * *